EE

GOVERNMENT POLYTECHNIC, KOLHAPUR – 416004.

(An Autonomous Institute of Govt. Of Maharashtra)

ODD TERM END EXAM NOV. / DEC. -2017

EXAM SEAT NO. | | | | | | |

LEVEL : - **FIRST** PROGRAM : **COMMON**
COURSE CODE :- **CCF202 / CCE202**
COURSE NAME :- **COMMUNICATION SKILLS**
MAX. MARKS : **40** TIME : **2 HRS.** DATE :- **24 / 11 / 2017**

Instruction :-
1) Answers to each section must be written in separate answer book.
2) Illustrate your answers with sketches wherever necessary.
3) Use of non-programmable pocket calculator is permissible.
4) Mathematical and other tables shall be made available on request.
5) Assume and mention suitable additional data if necessary.
6) Use of Mobile is strictly prohibited.
7) QN > Question No., SQN> Question No. R> Remembering, U> Understanding, A> Application, CO > Course Outcome

Q.N.	SQN	Question Text	URA	CO CCF202	Marks
Q.1		Answer the following questions in 3-5 sentences (attempt any FOUR)			08
	a)	Define communication. Give an example of communication event.	R	1	
	b)	Explain any two principles of written communication.	R	3	
	c)	Define encoding and decoding.	R	1	
	d)	Enlist any four advantages of over Head projector (OHP)	U	5	
	e)	Enlist any four tips of prepared speech.	U	2	
	f)	Write any four examples in which oral communication is used.	A	2	
Q.2		Answer the following questions in 12-14 sentences (attempt any FOUR)			16
	a)	Explain any four principles of effective communication.	U	1	
	b)	Distinguish between oral and written communication.	A	2,3	
	c)	State any four precautions one should take while making presentation.	A	5	
	d)	Explain any four interview techniques.	U	6	
	e)	State the importance of communication for the development of an engineer.	A	1	
	f)	Explain the various aspects of body language.	U	4	
Q.3		Attempt any TWO			16
	a)	Write an application letter along with your resume to 'Infosys software Banglore -05 for the post of engineer.	A	3	
	b)	Explain the types of communication.	U	1	
	c)	The following is the age wise readership of 'The Times of India' a daily newspaper.	A	4	

Age Group	Readership (%)
16 25	10
26 35	27
36 45	17
46 55	22
56 65	24

Present the above data in the form of pie graph.

****

GOVERNMENT POLYTECHNIC, KOLHAPUR 416004.

(An Autonomous Institute of Govt. of Maharashtra)

ODD TERM END EXAM NOV/DEC -2017

EXAM SEAT NO. | | | | | | |

LEVEL: **FOURTH** PROGRAM: **ELECTRICAL ENGINEERING**

COURSE CODE: **EEE405/EE413** COURSE NAME: **Testing & Maintenance of Elect. EQP.**

MAX. MARKS: **80** TIME: **3 HRS.** DATE: **20/11/2017**

Instruction:-

1) Answer to two sections must be written in separate section answer book provided.
2) Figure to the right indicates marks.
3) Illustrate your answers with sketches wherever necessary.
4) Use of non-programmable pocket calculator is permissible.
5) Mathematical and other tables shall be made available on request.
6) Assume additional suitable data necessary.
7) Use of Mobile is strictly prohibited.

Section – I **Marks**

Q.1 Attempt any **FOUR** **(08)**

a) State any two reasons of maintaining electrical equipments.

b) State IS code for three phase and single phase induction motor.

c) State the need for parallel operation of alternators.

d) State the need for foundations of machines.

e) List out the causes of electrical accidents.

f) Explain the term tolerance.

Q.2 Attempt any **FOUR** **(16)**

a) What is the purpose of conducting reduced voltage running up test ? Explain the method of conducting.

b) Differentiate between preventive maintenance and routine maintenance.

c) State as per IS what Do's and Dont's be observed for substation operations ?

d) An Induction motor is driving a load explain what will happen if,-

i) Supply voltage decreases

ii) Supply frequency decreses

e) Plan a preventive maintenance programme for a 3 phase slip-ring induction motor in heavy workshop.

f) What is breakdown maintenance ? State the steps taken in this type of maintenance and different checks to be carried out.

Q.3 Attempt any **TWO** **(16)**

a) Explain the conditions which should be satisfied before synchronizing an alternator and describe the procedure of synchronizing. State how the active and reactive load shared by the alternator is adjusted ?

b) Write a schedule of tolerances in case of rotating machines as per IS 4722 – 1968 in respect of the following,-

i) Efficiency

ii) Losses for machines above 50 KW

P.T.O.

iii) P.F.

iv) Speed of a.c. motors

v) Pull-out torque of induction motors

c) Describe the safety measures taken while working on electric installations.

Section – II

Marks

Q.4 Attempt any **FOUR** **(08)**

a) List any two type tests on transformer.

b) Write down the names of any four insulating material used for electrical machines.

c) List the agents which contaminates the insulating oil.

d) Write down any two mechanical faults in electrical machines.

e) Name any four tools used for loading of heavy equipments.

f) State the effect of misalignment of machines.

Q.5 Attempt any **FOUR** **(16)**

a) With neat diagram explain how no load losses and no load current of 1 phase transformer can be obtained.

b) State the necessity of paralled operation of transformer.

c) Explain the factors which affects life of insulating material.

d) What are the different types of faults in electrical machines.

e) What are the different causes of abnormal operation of electrical equipments.

f) Explain the factors involved in designing the machine foundations.

Q.6 Attempt any **FOUR** **(16)**

a) Draw neat circuit diagram of back to back test on two single phase transformers.

b) Two single phase transformers A and B are working in parallel. If $R_A = 1\Omega$, $X_A = 4\ \Omega$, $R_B = 0.8\ \Omega$ & $X_B = 5\ \Omega$. The total load to be supplied is 120 KW at 0.6 p.f. lagging calculate how the load will be shared by each transformer.

c) Explain how temperature of internal parts of the winding can be measured ?

d) Explain crackle test on oil.

e) Give trouble shooting chart of 3 phase induction motor.

f) State the use of ;

i) Bearing puller

ii) Filler gauge

iii) Dial indicator

iv) Spirit level.

GOVERNMENT POLYTECHNIC, KOLHAPUR 416004.

(An Autonomous Institute of Govt. of Maharashtra)

ODD TERM END EXAM NOV/DEC -2017

EXAM SEAT NO. | | | | | | |

LEVEL: **FIRST** PROGRAM: **EE/IE/E&TC/IT**

COURSE CODE: **CCF104/CCE104** COURSE NAME: **CHEMISTRY OF ENGINEERING MATERIALS**

MAX. MARKS: **80** TIME: **3 HRS.** DATE: **20/11/2017**

Instruction:-

1) Answer to each section must be written in separate answer book.
2) Illustrate your answers with sketches where ever necessary.
3) Use of non-programmable pocket calculator is permissible.
4) Mathematical and other tables will be made available on request.
5) Assume and mention suitable additional data necessary.
6) Use of Mobile is strictly prohibited.
7) **QN**>Question No, **SQN**>Sub-Question No, **R**> Remembering, **U**>Understanding, **A**>Application

---

QN	S. Q N	Question Text	Cognition Level R/U/A	Co Code	Marks
Q.1		Attempt any **FOUR**			**(08)**
	a)	Why structure of an atom is always electrically neutral?	A	CCF104-1	
	b)	State Pauli's exclusion principle	R	CCF104-1	
	c)	Define i) Degree of ionisation ii) Electrolyte	R	CCF104-2	
	d)	State Faraday's Second law of electrolysis.	R	CCF104-2	
	e)	Write impurities in natural water.	U	CCF104-4	
	f)	Write two reactions of hard water with soap.	U	CCF104-4	
Q.2		Attempt any **FOUR**			**(16)**
	a)	Give four postulates of Lewis & Langmuirs concept of stable electronic configuration.	R	CCF104-1	
	b)	Write Arrhenius theory of ionisation.	U	CCF104-2	
	c)	Define corrosion & Electrochemical corrosion. Write classification of corrosion in detail.	R	CCF104-3	
	d)	Explain disadvantages of scale formation in boiler	U	CCF104-4	
	e)	Give disadvantages of hard water for cooking & bathing purpose.	U	CCF104-4	
	f)	Distinguish between hard water & soft water.	U	CCF104-4	
Q.3		Attempt any **FOUR**			**(16)**
	a)	Write orbital electronic configuration of *i)* $^{12}_{6}C$ *ii)* $^{23}_{11}Na$ *iii)* $^{35}_{17}Cl$ *iv)* $^{40}_{20}Ca$	A	CCF104-1	
	b)	Calculate the time in second in which 0.3gms of copper is deposited from $CuSO_4$ solution when a current of 0.5amp is passed, the chemical equivalent (eq.wt) of cu being 31.6	A	CCF104-2	
	c)	Draw a neat labelled diagram & explain metal spraying process.	A	CCF104-3	
	d)	Write two factors influencing immersed corrosion. Why galvanized containers are not used to preserve food stuffs?	U	CCF104-3	
				P.T.O.	

	e)	Define sterilization. Explain with chemical reactions sterilization by using chloramines.	U	CCF104-4	
	f)	Draw neat labelled diagram for Ion-exchange method. Write reactions in regeneration of cation & anion exchange resin.	U	CCF104-4	
Q.4		Attempt any **FOUR**			**(08)**
	a)	Define i) open circuit voltage ii) E.M.F.	R	CCF104-5	
	b)	Distinguish between primary cell & secondary cell(any two)	U	CCF104-5	
	c)	Write four important ores of copper with their molecular formula.	U	CCF104-6	
	d)	Draw a neat labelled diagram of froth flotation method.	U	CCF104-6	
	e)	Define ferrous & nonferrous alloys.	R	CCF104-6	
	f)	Write four characteristics of good insulators.	R	CCF104-7	
Q.5		Attempt any **FOUR**			**(16)**
	a)	Write construction, working of dry cell with diagram	U	CCF104-5	
	b)	Distinguish between calcination & roasting (any four points).	U	CCF104-6	
	c)	Draw a metallurgical flow chart for extraction of copper.	U	CCF104-6	
	d)	Give composition properties & applications of Brazing alloy.	U	CCF104-6	
	e)	Write four properties & four applications of graphite as a semiconductor.	R	CCF104-6	
	f)	Define composite material. Explain classification of composite material with example.	U	CCF104-7	
Q.6		Attempt any **FOUR**			**(16)**
	a)	Explain construction & working of solar cells with diagram.	A	CCF104-5	
	b)	Describe the process of smelting with diagram & reaction.	A	CCF104-6	
	c)	Give four uses & four application of copper.	U	CCF104-6	
	d)	Write four purposes of making alloy with examples.	U	CCF104-6	
	e)	Distinguish between addition & condensation polymerisation.	U	CCF104-7	
	f)	Write four characteristics & four uses of adhesives.	R	CCF104-7	
		**********			

GOVERNMENT POLYTECHNIC, KOLHAPUR 416004.

(An Autonomous Institute of Govt. of Maharashtra)

ODD TERM END EXAM NOV/DEC -2017

EXAM SEAT NO. | | | | | | |

LEVEL: **THIRD** PROGRAM: **ELECTRICAL ENGINEERING.**

COURSE CODE: **EEF302/E203/EE02/EE203/EEE307.** (E E202) COURSE NAME: **ELECTRICAL CIRCUITS.**

MAX. MARKS: **80** TIME: **3 HRS.** DATE: **30/11/2017**

Instruction:-

1) Answers must be written in the main answer book provided. (and supplements if required)
2) Illustrate your answers with sketches where ever necessary.
3) Use of non-programmable pocket calculator is permissible.
4) Mathematical and other tables will be made available on request.
5) Assume and mention suitable additional data necessary.
6) Use of Mobile is strictly prohibited.
7) **QN**>Question No, **SQN**>Sub-Question No, **R**> Remembering, **U**>Understanding, **A**>Application CO>Course outcome

---

QN	S. Q. N	Question Text	R U A	CO-EEF 302	Marks Marks
Q.1		Attempt any **FOUR**			**(08)**
	a)	State Kirchhoff's current and voltage Law.	R	1	
	b)	Define Active and Passive network related to electrical network.	R	1	
	c)	State maximum power transfer theorem for a DC circuit.	R	1	
	d)	Write down any four characteristics of a DC series circuit.	R	3	
	e)	Define RMS value of an alternating current.	R	2	
	f)	Define power factor and state its value for a pure resistive circuit.	R U	3	
Q.2		Attempt any **FOUR**			**(16)**
	a)	For the network shown in fig-I, determine the current supplied by each source and voltage across load resistance R_L by using Maxwell's mesh Analysis.	A	1	
	b)	By using Norton's theorem, determine voltage across $R_L = 4\Omega$ resistance, for the circuit shown in fig.II.	A	1	
	c)	Derive an expression for the instantaneous value of an alternating sinusoidal emf in terms of its maximum value, angular frequency and time.	U	2	
	d)	Two currents i_1 and i_2 are given by the expression, $i_1 = 20 \sin(314t+\pi/4)$ Amps and $i_2 = 12 \sin(314t-\pi/3)$ Amps. Find the value $i_1 + i_2$ and express the answer in the form $i = I_m \sin(wt \pm \emptyset)$	A	2	
	e)	Explain resonance in a series R.L.C. circuit and derive an expression for the series resonance frequency.	U	3	
	f)	A two element series circuit is connected across on AC source of $e = 200\sqrt{2}\sin(314t + 20^0)$ volts. The current in the circuit is found to be $i = 10.14\cos(314t - 25^0)$ amps. Determine the Parameters of the circuit.	A	3	
Q.3		Attempt any **FOUR**			**(16)**
	a)	Derive an expression for converting a given delta resistive network into an equivalent star network.	U	1	
	b)	Determine the current and power dissipated in the 9Ω resistance shown in fig.-III by applying superposition Theorem.	A	1	

P.T.O.

	c)	The maximum value of a sinusoidal alternating voltage and current are 400V and 20A respectively in a circuit connected to a 50 H_2 AC supply. The instantaneous values of the voltage and current are 283 V and 10A respectively at t=0 both increasing positively. Determine the power consumed in the circuit and write down the expression for instantaneous voltage and current in terms of time t.	A	2	
	d)	A 50 H_Z sinusoidally varying alternating current has RMS value equal to20A. Write down the equation for instantaneous value of current. Determine - i) Current magnitude at t=0.0125sec. after passing through zero and increasing positively. ii) At what time measured from a positive maximum value, will the instantaneous current be 14.14 A ?	A	2	
	e)	Prove that the average power consumption in pure inductor is zero when a sinusoidal AC voltage is applied across it. Show it clearing with help of wave diagram	U	3	
	f)	In a series R.L. circuit, the voltage and the current are expressed as ,- $V= 25\sin(314t+\pi/3)$ volts. $i = 5\sin(314t+\pi/6)$ Amps. Determine : (i) Impedance of the circuit. (ii) Value of R and L (iii) Power factor (iv) Average power consumed by the circuit.	A	3	
Q.4		Attempt any **FOUR**			(08)
	a)	State the type of three-phase supply systems.	R	6	
	b)	Define : Balanced voltage (Supply).	R	6	
	c)	Define : Parallel Resonance.	R	4	
	d)	State the relationship between Line and Phase values of voltage and current in balanced STAR connection.	R	6	
	e)	In a parallel circuit consisting of two branches, the branch currents are : $I_1=3\angle 60^0$ A and $I_2=5\angle -30^0$ A. Determine the total circuit current.	A	4	
	f)	State kirchhoff's current Law (KCL) applicable to AC circuit	R	5	
Q.5		Attempt any **FOUR**			(16)
	a)	A coil having R=10Ω and L=0.5H is connected in parallel with capacitor of 40 μF. This combination is supplied from 230V, 50 H_Z supply. Determine (i) Branch currents. (ii) Total current. (iii) Power consumed in the circuit	A	4	
	b)	A coil having R=20Ω and L=0.2H is connected in parallel with capacitor C. Determine – (i) The value of C for which the circuit resonates at $50H_z$. (ii) The quality factor of circuit. (iii) Branch currents if supply voltage is 230 V, 50 H_z.	A	4	
	c)	State any four features of parallel resonance.	U	4	
	d)	State any four advantages of Polyphase system over Single-phase system.	U	6	
	e)	A balanced star connected impedances of (3+j4)Ω are connected to 415 V, 3Ø supply. Determine- (i) Phase current. (ii) Phase Voltage. (iii) Total 3 phase active, reactive and apparent powers.	A	6	

	f)	A balanced delta connected impedances of (6+j8)Ω are connected to 3Ø, 415V supply. Determine : (i) Phase current. (ii) Line current. (iii) Load power factor. (iv) Total three –phase power consumed by load.	A	6	
Q.6		Attempt any **FOUR**			(16)
	a)	State and explain maximum power Transfer theorem as applicable to AC networks.	U	5	
	b)	With neat diagram, explain how the three-phase voltages are generated.	U	6	
	c)	Determine the current I_L in circuit shown in Fig. ~~A~~6(c) using superposition theorem.	A	5	
	d)	Determine the current I_A in the network shown in Fig. Q.6(d) using the thevenin's theorem.	A	5	
	e)	Determine the current I_B in the circuit shown in Fig. ~~A~~6(e) using Kirchhoff's Laws.	A	5	
	f)	Determine the current I_C in the circuit shown in Fig. ~~A~~6(f) using Norton's theorem.	A	5	

*****

P.T.O.

Set-I

Sketches

Prog: Electrical Engg. Course: Electrical Circuits
Code: EEF302 -Set-I

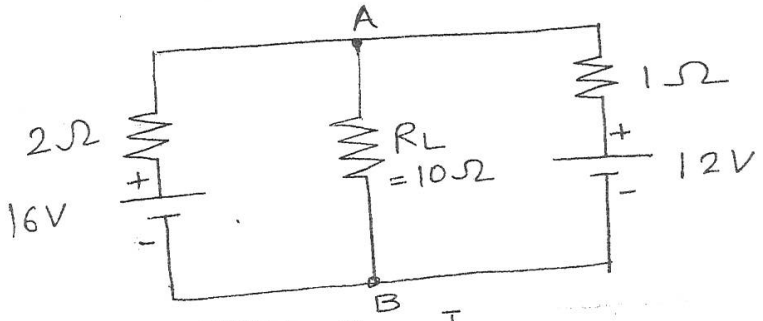

Q. 2-ⓐ - Fig.-I

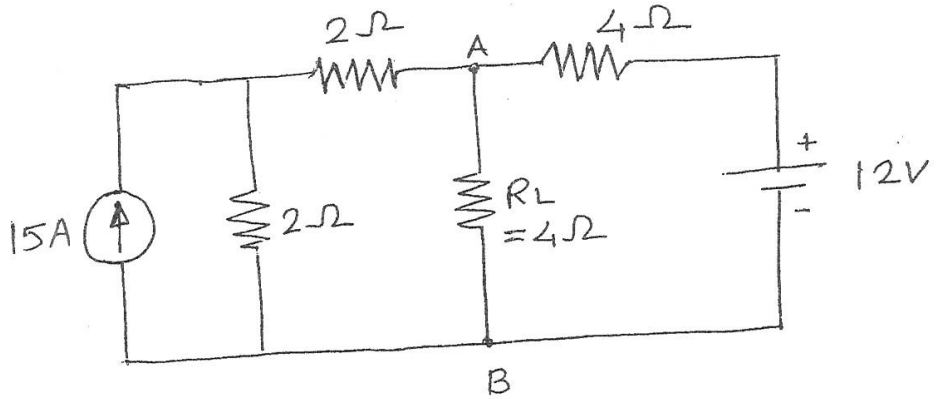

Q. 2-ⓑ - Fig. II

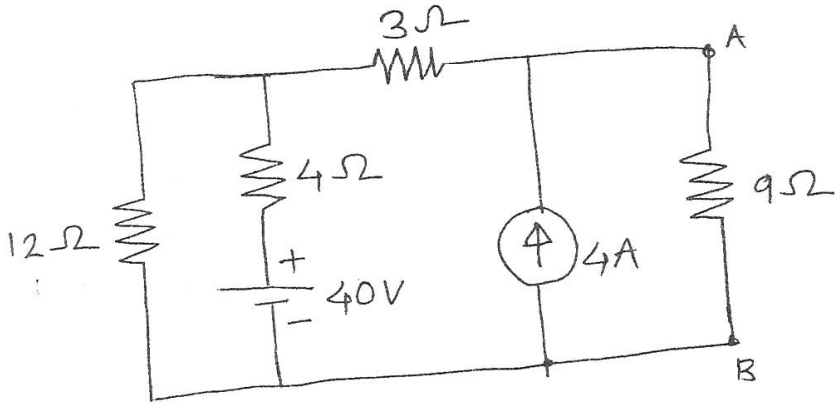

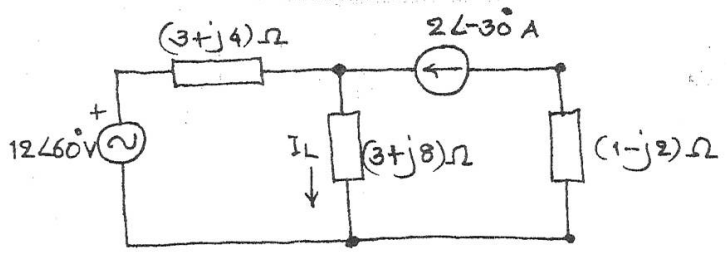

Fig. Q. 6 (c).

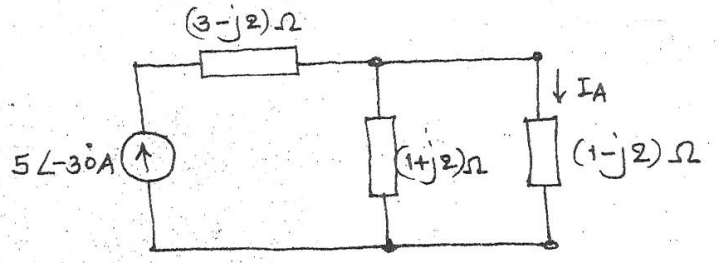

Fig. Q. 6 (d)

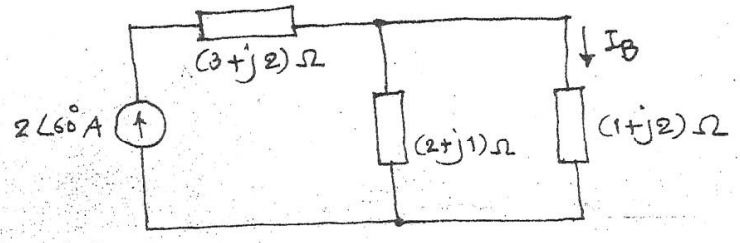

Fig. Q. 6 (e)

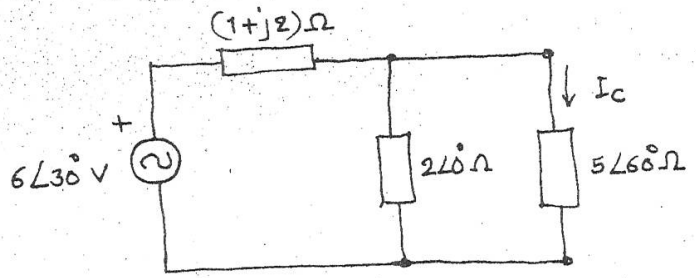

Fig. Q. 6 (f)

* * * *

GOVERNMENT POLYTECHNIC, KOLHAPUR – 416004.

(An Autonomous Institute of Govt. Of Maharashtra)

ODD TERM END EXAM NOV./ DEC. -2017

EXAM SEAT NO. | | | | | | |

LEVEL : - **THIRD** PROGRAM : **ELECTRICAL**

COURSE CODE :- **EEE311**

COURSE NAME :- **NON-CONVENTIONAL ENERGY SOURCES**

MAX. MARKS : **80** TIME : **3 HRS.** DATE :- **23 / 11 / 2017**

Instruction :-

1) Answers must be written in the main answer book provided.(and supplements if required)
2) Figure to the right indicate marks.
3) Illustrate your answers with sketches wherever necessary.
4) Use of non-programmable pocket calculator is permissible.
5) Mathematical and other tables shall be made available on request.
6) Assume additional suitable data necessary.
7) Use of Mobile is strictly prohibited.

Marks

Q.1 Attempt any **FOUR** (08)

a) State any two angles used for solar radiation analysis.

b) What meant by wind power coefficient?

c) List the advantages of flat plate collector.

d) Which forces produces torque on blades and thrust on turbines? State their equations?

e) State basic components of photo voltaic power generation system?

f) What are the advantages of solar green house?

Q.2 Attempt any **FOUR** (16)

a) Discuss with necessary labeled sketches the flat plate collectors used for conversion of solar radiation into heat (any two).

b) Explain Renewable and Non renewable energy sources their advantages and limitations.

c) What is meant by Lift and drag in case of wind energy conversion systems.

d) State classification of wind energy conversion system based on axis of rotation and electrical output.

e) Comment on generator and functions of turbine-generator control systems.

f) Write short notes with labeled diagrams of solar cooking devices and their types.

Q.3 Attempt any **FOUR** (16)

a) Draw labeled block diagram and explain photo voltaic system for electric power generation plant.

b) Discuss available wind power and wind power of the wind energy conversion.

c) Which are the factors to be considered for site selection of wind mill power generation plant?

d) Write short notes on solar pump system used for irrigation system.

e) State and explain solar radiation measuring equipment sketch labeled diagram.(any one)

f) Discuss space heating system useful for building heating by solar energy system.

PTO

Q.4 Attempt any **FOUR** (08)

a) State types of bio-gas plants.

b) State any two applications of biogas plant.

c) What is basic principle of tidal power?

d) State the operation methods of energy from oceans.

e) What is Magneto-Hydro-Dynamic (MHD) generation principle?

f) What is geothermal energy?

Q.5 Attempt any **FOUR** (16)

a) State the advantages and disadvantages of tidal power generation.

b) Explain working of fuel cell with neat diagram.

c) Explain KVIC Digester with neat diagram.

d) State any four biomass fuels. Also state the composition of bio gas.

e) With neat sketch explain how geothermal energy is converted into electrical energy (any one method)

f) State any four limatations of tidal power plant.

Q.6 Attempt any **FOUR** (16)

a) Describe open ocean thermal electric conversion (OTEC) power plant with the help of block diagram.

b) What are the different methods of conversion of biomass into biogas explain any one in detail?

c) Explain with neat diagram of Pragati Biogas plant.

d) Write a note on prospects of tidal energy in India.

e) Describe MHD (Magneto- hydro- dynamic) power generation with neat diagram.

f) State the advantages and limitation of small hydro power plant (SHP)

****

GOVERNMENT POLYTECHNIC, KOLHAPUR 416004.

(An Autonomous Institute of Govt. of Maharashtra)

ODD TERM END EXAM NOV/DEC -2017

EXAM SEAT NO. | | | | | | |

LEVEL: **THIRD** PROGRAM: **ELECTRICAL ENGINEERING**

COURSE CODE: **EE301/R228** COURSE NAME: **HIGHER MATHEMATICS**

MAX. MARKS: **80** TIME: **3 HRS.** DATE: **24/11/2017**

Instruction:-

1) Answers must be written in the main answer book provided. (and supplements if required)
2) Figure to the right indicates marks.
3) Illustrate your answers with sketches wherever necessary.
4) Use of non-programmable pocket calculator is permissible.
5) Mathematical and other tables shall be made available on request.
6) Assume additional suitable data necessary.
7) Use of Mobile is strictly prohibited.

Marks

Q.1 Attempt any **FOUR** **(08)**

a) Prove that $\Delta = E - 1$

b) Prove that $\Delta = E\nabla$

c) Evaluate $\Delta^2(ab^x)$

d) If $f(x) = x^2 + x + 1$ evaluate $\Delta f(x)$ (by taking width of interval as h)

e) If A and B are two events such that $P(A) = \frac{2}{3}$, $P(B) = \frac{1}{2}$, $P(A \cap B) = \frac{5}{12}$ *find* $P(A' \cap B')$

f) Evaluate $\int_0^\infty e^{-h^2x^2}\,dx$

Q.2 Attempt any **FOUR** **(16)**

a) Evaluate $\int_0^2 x^3\sqrt{2-x}\,dx$

b) An urn contains 6 white, 4 red, and 9 black balls. If 3 balls are drawn at random, find probability that one is of each colour.

c) If $f(x) = 2x^3 - 3x^2 + 3x - 10$ then express it in a factorial notation.

d) Find missing term from the following table.

x	0	1	2	3	4
y	1	3	9	--	81

e) Using Lagrange's interpolation formula find F(2.5)

x	1	2	3
y	7	18	35

f) Using Newton's forward difference formula calculate y at x =1.5 from the following table.

x	6	4	2	0
y	218	66	10	2

Q.3 Attempt any **FOUR** **(16)**

a) Using Newton raphson method find the approximate root of the equation $x^3 - 3x - 5 = 0$ upto 3 iterations.

b) Solve by Gauss-Seidal method upto 3 iterations. $x + 7y - 3z = -22$, $5x - 2y + 3z = 18$ $2x - y + 6z = 22$

P.T.O

c) Solve the equations $x^3 - 9x + 1 = 0$ using Regula –Falsi method (upto three iterations)

d) Evaluate $\int_0^1 \sqrt[3]{(\log \frac{1}{x})}\, dx$

e) Show that : $B(m,n) = 2\int_0^{\frac{\pi}{2}} \sin^{2m-1}\theta \cos^{2n-1}\theta \, d\theta$

f) Show that : $\int_0^2 x^4 (8 - x^3)^{-\frac{1}{3}} dx = \frac{16}{3} B\left(\frac{5}{3}, \frac{2}{3}\right)$

Q.4 Attempt any **FOUR** **(08)**

a) Evaluate $L(\sin^2 3t)$

b) Evaluate $L(\sin(at+b))$

c) Evaluate $L(e^t \cos 4t)$

d) Evaluate $L^{-1}\left[\frac{s+5}{s^2+15}\right]$

e) If $f(x) = x + \frac{\pi}{2}$, $-\pi < x < 0$
$= \frac{\pi}{2} - x$, $0 < x < -\pi$ then show than f(x) is even function.

f) Find the Fourier constant a_0 in the Fourier expansion of $f(x) = \sqrt{1 - \cos x}$ $in\ (0, 2\pi)$

Q.5 Attempt any **FOUR** **(16)**

a) Find the Fourier transform of f(x) if $f(x) = \begin{cases} e^{iwx}, & a < x < b \\ 0 & , x < a,\ x > b \end{cases}$

b) Evaluate $L^{-1}\left[\frac{s+29}{(s+4)(s^2+9)}\right]$

c) Find $L(t^2 \sin 3t)$

d) Find $L^{-1}\left[\frac{1}{(s+3)(s-1)}\right]$ using convolution theorem.

e) Use Laplace transformation method to solve $3\frac{dy}{dt} + 2y = e^{3t}$, $y = 1\ at\ t = 0$

f) Find the Fourier series for $f(x)$ in the interval $(0, 2\pi)$ where $f(x) = x$

Q.6 A Attempt any **TWO** **(08)**

a) Solve using L.T method $\frac{d^2y}{dt^2} - \frac{dy}{dt} - 2y = 20\sin 2t$ with $y(0) = 1,\ y'(0) = 2$

b) Solve using L.T. method $\frac{dy}{dt} + 2y = \sin t,\ if\ y(0) = 0$

c) Find Fourier transform of $f(x) = k,\ |x| < a$
$= 0,\ |x| > a$

B Attempt Any **ONE** **(08)**

a) Obtain the Fourier series for $f(x) = 0, -\pi < x \le 0$
$= x, 0 \le x < \pi$ and hence deduce that

$1 + \frac{1}{3^2} + \frac{1}{5^2} + \frac{1}{7^2} + ---- \frac{\pi^2}{4}$

b) If $f(x) = \left(\frac{\pi - x}{2}\right)^2$ in the range $(0, 2\pi)$, obtain Fourier series expansion and hence deduce that $\frac{\pi^2}{6} = \frac{1}{1^2} + \frac{1}{2^2} + \frac{1}{3^2} + ---$

****

GOVERNMENT POLYTECHNIC, KOLHAPUR – 416004.

(An Autonomous Institute of Govt. Of Maharashtra)

ODD TERM END EXAM NOV./ DEC. -2017

EXAM SEAT NO. | | | | | | |

LEVEL : - **THIRD** PROGRAM : **ALLIED**
COURSE CODE :- **MEE312/IEE/ETE311/MTE311/MG227/R227**
COURSE NAME :- **NON CONVENTIONAL ENERGY SOURCES**
MAX. MARKS : **80** TIME : **3 HRS.** DATE :- **24 / 11 / 2017**

Instruction :-

1) Answers must be written in the main answer book provided.(and supplements if required)
2) Figure to the right indicate marks.
3) Illustrate your answers with sketches wherever necessary.
4) Use of non-programmable pocket calculator is permissible.
5) Mathematical and other tables shall be made available on request.
6) Assume additional suitable data necessary.
7) Use of Mobile is strictly prohibited.

Marks

Q.1 Attempt any **FOUR** (08)

a) What do you meant by fossiel fuels?

b) Define solar constant.

c) State the merits of solar energy. (any four)

d) What are the causes of wind?

e) State the advantages of wind energy. (any four)

f) What is biomass energy?

Q.2 Attempt any **FOUR** (16)

a) Briefly explain the challenges to explore non conventional energy sources.

b) Explain briefly flat plate collector.

c) What are the various solar energy utilization methods?

d) Draw block diagram of control panel of wind energy system and explain it.

e) State the classifications of wind turbine? Explain any one in brief.

f) Explain various biomass types.

Q.3 Attempt any **TWO** (16)

a) With neat sketch explain the working of sunshine recorder.

b) What is the future of wind energy in India? Explain the environmental effects of wind energy.

c) Explain with neat sketch the working of floating drum type biogas plant.

P.T.O.

Q.4 Attempt any **FOUR** (08)

a) State the four advantages of ocean energy.

b) Enlist the basic components of a tidal power plant.

c) State four limitations of geothermal energy.

d) State four applications of fuel cell.

e) State the objectives of energy conservation.

f) Define i) ROI ii) Life cycle cost.

Q.5 Attempt any **FOUR** (16)

a) State the requirement for site selection of ocean thermal power plant.

b) Draw a neat sketch of Dry steam system geothermal power plant and explain its working.

c) Enlist the components of small mini hydroelectric plant and state the function of each component.

d) Define energy management. Write four objectives of it.

e) What is energy audit? Explain detailed energy audit methodology.

f) State the ways of improving boiler efficiency.

Q.6 Attempt any **FOUR** (16)

a) Describe single basin tidal power plant.

b) State the main components of fuel cell and the function of each component.

c) State the principle of Magneto-hydro dynamic power generation. State is advantages.

d) State the factors affecting site selection for geothermal power plant.

e) Draw a neat sketch of gas turbine co-generation plant and explain its working.

f) State four waste heat recovery devices. State advantages of waste heat utilization.

****

GOVERNMENT POLYTECHNIC, KOLHAPUR 416004.

(An Autonomous Institute of Govt. of Maharashtra)

ODD TERM END EXAM NOV/DEC -2017

EXAM SEAT NO. | | | | | | |

LEVEL: **FOURTH** PROGRAM: **ELECTRICAL ENGG.**

COURSE CODE: **EEE401/EE207/EE209** COURSE NAME: **AC MACHINES**

MAX. MARKS: **80** TIME: **3 HRS.** DATE: **24/11/2017**

Instruction:-

1) Answer to two sections must be written in separate section answer book provided.
2) Figure to the right indicates marks.
3) Illustrate your answers with sketches wherever necessary.
4) Use of non-programmable pocket calculator is permissible.
5) Mathematical and other tables shall be made available on request.
6) Assume additional suitable data necessary.
7) Use of Mobile is strictly prohibited.

		Section – I	**Marks**
Q.1		Attempt any **FOUR**	**(08)**
	a)	Classify Induction motors,	
	b)	Define synchronous speed of I. M.	
	c)	Define circle Diagram.	
	d)	Why there is need of Starters for 3 phase I.M.	
	e)	Draw the short circuit equivalent diagram of I.M.	
	f)	Draw the circuit diagram using No Load test & Label it.	
Q.2		Attempt any **FOUR**	**(16)**
	a)	Draw a block diagram showing power stages of a 3 phase induction motor.	
	b)	Derive the condition for Tmax of a 3 phase Induction motor.	
	c)	A 3 phase, 6 pole Induction Motor is connected to a 50 H_Z supply. Calculate synchronous speed, rotor speed at 4% slip, frequency of rotor induced voltage at 4% slip, frequency of stator voltage at 10% slip.	
	d)	Explain with the neat sketches the production of rotating megeritic field in three phase I.M. magnetic	
	e)	Explain with diagram how star delta sterters are used for reducing the starting current of 3 phase induction motors.	
	f)	Give experimental set up for drawing a circle diagram of three phase induction motor.	
Q.3		Attempt any **TWO**	**(16)**
	a)	A 415 V, 29.84 KW, 50 H_Z delta connected motor gave the following test data - No Load test - 415 volt, 21 Amp, 1250 watt. Blocked roter test - 100 volt, 45 Amp, 2730 watt. Construct the circle diagram & determine the line current and power factor for rated input.	

PTO

	b)	i) Enlist various starting arrangements for a poly phase induction motor starting also their field of application. ii) It is desired to have starting torque as 80% of maximum torque. The motor has standstill rotor impedance 0.1+j2 ohms. Calculate minimum additional resistance value in Rotor circuit.	
	c)	Describe & explain torque slip curve of an induction motor having rotor reactance & standstill 10 times of rotor resistance and full load slip 6%. Show various values in terms of full load torque.	
		Section – II	**Marks**
Q.4		Attempt any **FOUR**	**(08)**
	a)	Define voltage regulation of alternator.	
	b)	State the applications of universal motor.	
	c)	State the function of damper winding used in alternator.	
	d)	Define coil pitch factor.	
	e)	State various methods to start synchronous motor.	
	f)	Define hunting in synchronous motor.	
Q.5		Attempt any **FOUR**	**(16)**
	a)	Derive emf equation of an alternator.	
	b)	Draw schematic representation of a shaded pole induction motor and explain its working.	
	c)	Explain determination of regulation of three phase alternator by synchronous impedance method.	
	d)	Explain in brief V-curves of synchronous motor.	
	e)	A 3 phase, 4-pole alternator has 60 slots, 2 conductors per slot, the pitch of the coil is 3 slots less than full pitch find Kc and Kd.	
	f)	Explain in brief synchronous generator loaded with unity power factor load.	
Q.6		Attempt any **TWO**	**(16)**
	a)	Draw a schematic diagram of an AC series motor. How to change it speed and its direction of rotation ? Give two applications of AC series motor.	
	b)	A 500 KVA three phase, star connected alternator has a rated line to line terminal voltage of 3300 V. The resistance and synchronous reactance per phase are 0.3 and 0.4 Ω respectively. Calculate the voltage regulation at full load 0.8 p.f. lagging.	
	c)	Explain the effect of change of excitation on the performance of synchronous motor. *****	

GOVERNMENT POLYTECHNIC, KOLHAPUR 416004.

(An Autonomous Institute of Govt. of Maharashtra)

ODD TERM END EXAM NOV/DEC -2017

EXAM SEAT NO. | | | | | | |

LEVEL: **FIREST** PROGRAM: **ELECTRICAL ENGG.**

COURSE CODE: **EEF102/EEE102** COURSE NAME: **Fundamental of Electricity & Magnetism**

MAX. MARKS: **80** TIME: **3 HRS.** DATE: **24/11/2017**

Instruction:-

1) Answer to each section must be written in separate answer book.
2) Illustrate your answers with sketches where ever necessary.
3) Use of non-programmable pocket calculator is permissible.
4) Mathematical and other tables will be made available on request.
5) Assume and mention suitable additional data necessary.
6) Use of Mobile is strictly prohibited.
7) **QN**>Question No, **SQN**>Sub-Question No, **R**> Remembering, **U**>Understanding, **A**>Application

---

QN	S.Q.N	Question Text	Cognition Level R/U/A	Co Code	Marks Marks
Q.1		Attempt any **FOUR**			**(08)**
	a)	State the properties of charge on body.	**R**	**CO1**	
	b)	What is mean by equipotential surfaces.	**R**	**CO1**	
	c)	State ohms law & its expression with suitable example	**R**	**CO2**	
	d)	State & derive expression for equivalent resistance for two resistances R_1 & R_2 are connected in parallel.	**A**	**CO2**	
	e)	State the expression for charging current from dc source for charging of capacitor as a function of time.	**U**	**CO3**	
	f)	Define time constant for charging & discharging of capacitor.	**R**	**CO3**	
Q.2		Attempt any **FOUR**			**(16)**
	a)	State couloumbs law of Electrostatics for a charged body. Also state the factors on which it depends with their expression.	**R**	**CO3**	
	b)	A platinum coil has a resistance of 3.146 Ω at 40 ^{0}c & 3.767 Ω at 100 ^{0}c find the resistance at 0 ^{0}c & temperature coefficient of resistance at 40 ^{0}c.	**A**	**CO1**	
	c)	Solve the given network as shown in fig no. (1) to find the equivalent of delta into star by Delta to star conversion method	**A**	**CO2**	

P.T.O.

	d)	Find the equivalent resistance across forminal A B for given resistive network as shown in fig (2).	A	CO2	
	e)	Derive an expression for total or equivalent capacitor for 3 capacitors connected in parallel (say C_1, C_2 & C_3)	A	CO3	
	f)	A capacitor of 20 μf connected in series with 300 Ω resistor is suddenly connected across 200 Vdc find - i) Time constant ii) Initial current iii) Equation with value of voltage as function of time iv) Equation with value of current as function of time.	A	CO3	
Q.3		Attempt any **FOUR**			**(16)**
	a)	State and explain the Electrical lines of forces. Draw useful sketches	U	CO1	
	b)	Explain joules law of electric heating along with suitable expressions and examples.	U	CO1	
	c)	Solve the given network as shown in fig (3) to find the current taken & power dissipiated in resistance of 8 Ω across terminal A B use any desired method for this.	A	CO2	
	d)	State the expressions to convert resistive delta connected network into an equivalent resistive star connected network.	U	CO2	
	e)	Derive an expression for capacitor of partly dielectric medium & partly air medium across the parallel plates.	U	CO3	
	f)	A capacitor having plates area 200 cm^2 separated by distance of 4 mm thick dielectric & capacitance is 0.0004 μF & potential drop is 20,000 volt across it. Calculate - i) Potential Gradient in v/m ii) The total charge on plate. Iii) Relative permeability iv) The electric flux density of dielectric medium.	A	CO3	
Q.4		Attempt any **FOUR**			**(08)**
	a)	Define magnetic flux density. State its unit.	R	CO4	
	b)	Define permeability of any material. State types of permeability.	R	CO5	
	c)	Define mmf. State its unit.	R	CO5	
	d)	Define the term 'leakage coefficient'. What is its practical value.	R	CO5	
	e)	State the types of induced emf.	R	CO6	
	f)	State any two applications of air core inductor.	R	CO6	

Q.5		Attempt any **FOUR**			**(16)**
	a)	Define permeability of free space. State its unit. State its value.	**U**	**CO5**	**02** **01** **01**
	b)	Explain right hand rule and cork screw rule to find direction of magnetic field.	**U**	**CO6**	
	c)	Explain with diagram effect of direction of current through straight conductor on magnetic field.	**U**	**CO4**	
	d)	State and explain Faraday's laws of electromagnetic induction.	**U**	**CO5**	
	e)	Explain mutually induced emf with diagram.	**U**	**CO6**	
	f)	Explain ferrite core inductor with neat diagram.	**U**	**CO6**	
Q.6		Attempt any **FOUR**			**(16)**
	a)	Explain Fleming's right hand rule and Lenz's law for finding direction of induced emf.	**U**	**CO6**	
	b)	i) State mathematical expression of mutual inductance. ii) Two indentical coils with L=0.03 H have a coupling coefficient 0.8. Calculate mutual inductance.	**A**	**CO6**	
	c)	Compare magnetic and electric circuit (Any four points)	**U**	**CO5**	
	d)	Explain with diagram 'magnetic fringing'.	**U**	**CO5**	
	e)	An iron ring of cross sectional area 6 cm^2 is wound with a wire of 100 turns and saw cut of 2 mm. Calculate magnetizing current required to produce a flux of 0.1 mwb. Its mean length of magnetic path is 30 cm. and relative permeability of iron is 470.	**A**	**CO5**	
	f)	State the factors affecting hysteresis loss. How hysteresis loss can be minimized. *****	**A**	**CO5**	**03** **01**

P.T.O.

Section I

Q2-c) Fig 1

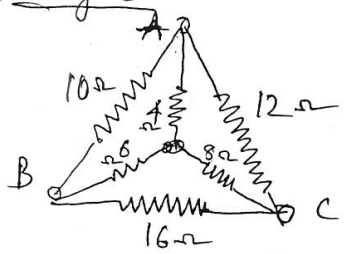

Eg-Y = ?

Q2-d) fig 2

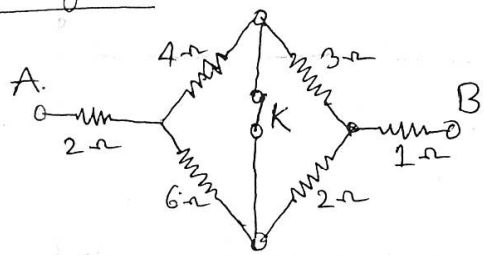

$R_{AB} = ?$

Q3-c) fig 3

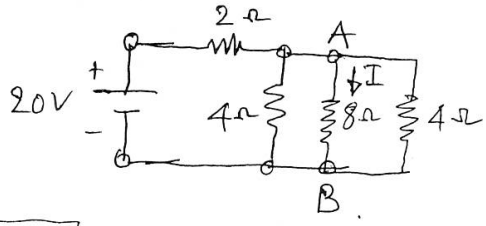

$I_{AB} = ?$

$P_{AB} = ?$

GOVERNMENT POLYTECHNIC, KOLHAPUR – 416004.

(An Autonomous Institute of Govt. Of Maharashtra)

ODD TERM END EXAM NOV. / DEC. 2017

EXAM SEAT NO. | | | | | | |

LEVEL : - **FIFTH** PROGRAM : **ELECTRICAL**

COURSE CODE :- **EEE510 / EE406**

COURSE NAME :- **INDUSTRIAL ORGANIZATION & MANAGEMENT**

MAX. MARKS : **80** TIME : **3 HRS.** DATE :- **24 / 11 / 2017**

Instruction :-

1) Answer to two sections must be written in separate section answer book provided.
2) Figure to the right indicate marks.
3) Illustrate your answers with sketches wherever necessary.
4) Use of non-programmable pocket calculator is permissible.
5) Mathematical and other tables shall be made available on request.
6) Assume additional suitable data necessary.
7) Use of Mobile is strictly prohibited.

Section – I Marks

Q.1 Attempt any **FOUR** (08)

a) Explain scientific management.

b) State the strengths of Globalization.

c) Write the responsibilities of leadership.

d) State the different types of partners in partnership organization.

e) State types of training required for a supervisor in an industry.

f) Explain Motivation for employees.

Q.2 Attempt any **FOUR** (16)

a) Explain the functions of personnel management.

b) Explain different steps involved in an organization.

c) Explain the role of public sector in developing countries.

d) Define the term co-ordination and state its need in management.

e) Compare Authority and Responsibility.

f) State and explain levels of management.

Q.3 Attempt any **FOUR** (16)

a) State the 14 principles of management as described by Henry Fayol.

b) Explain the term "span of control".

c) What is co-operative society? Explain types of co-operative societies.

d) Give the importance of "Service Sector" in Indian economy.

e) State and explain objectives of advertising.

f) Give applications of marketing research and state its scope also.

P.T.O.

Section – II

Marks

Q.4 Attempt any **FOUR** (08)

a) State the need for industrial dispute Act.

b) State the coverage of the electricity Act.

c) Define an Accident.

d) Define a financial manager.

e) State briefly the importance of the compensation Act.

f) Define under-capitalization.

Q.5 Attempt any **FOUR** (16)

a) Name the types of capital and describe their coverage.

b) State the effects of over-capitalization.

c) Name the different sources of finance for industries. And describe their role in brief.

d) Name the types of industrial Accidents and describe each one in brief.

e) Name and describe use of any four personnel protective equipment.

f) Describe inventory control and its role.

Q.6 Attempt any **TWO** (16)

a) Describe in detail with example the Technique of ABC analysis applied in material management of industries.

b) Describe the CPM & PERT applied to management of projects.

c) Describe the JIT & ERP techniques giving suitable simple examples.

****

GOVERNMENT POLYTECHNIC, KOLHAPUR 416004.

(An Autonomous Institute of Govt. of Maharashtra)

ODD TERM END EXAM NOV/DEC -2017

EXAM SEAT NO. | | | | | | |

LEVEL: **THIRD** PROGRAM: **ELECTRICAL ENGINEERING**

COURSE CODE: **EEF305/EEE308** COURSE NAME: **ELECTRICAL MATERIALS, WIRING & ILLUMNATION**

MAX. MARKS: **80** TIME: **3 HRS.** DATE: **06/12/2017**

Instruction:-

1) Answers must be written in the main answer book provided. (and supplements if required)
2) Illustrate your answers with sketches where ever necessary.
3) Use of non-programmable pocket calculator is permissible.
4) Mathematical and other tables will be made available on request.
5) Assume and mention suitable additional data necessary.
6) Use of Mobile is strictly prohibited.
7) **QN**>Question No, **SQN**>Sub-Question No, **R**> Remembering, **U**>Understanding, **A**>Application **CO**>Course outcome

---

QN	SQN	Question Text	RUA	Co EEF305	Mark
Q.1		Attempt any **FOUR**			**(08)**
	a)	Classify electrical material.	R	2	
	b)	State meaning of ACSR cable & its material used.	U	2	
	c)	List the terms related to magnetic material (Atleast four)	U	2	
	d)	Discuss Hysteresis & eddy current loss for magnetic material.	R	2	
	e)	Explain phenomena of magnetostriction occurs in magnetic material.	U	2	
	f)	Explain basics of electrical property of insulation material.	U	3	
Q.2		Attempt any **FOUR**			**(16)**
	a)	State expected properties of conducting material & their characteristics.	U	1	
	b)	Explain with suitable sketch conductors used with cable & state their advantages and properties.	R	1	
	c)	Discuss magnetization characteristics of ferromagnetic material use suitable sketches.	A	2	
	d)	Describe properties & applications of soft magnetic material.	A	2	
	e)	Enlist the mechanical properties of insulator & explain any two of them.			
	f)	Enlist the Thermal properties of insulator & Explain any two of them.			
Q.3		Attempt any **FOUR**			**(16)**
	a)	Compare Copper & Alluminium conducting material used for electrical apparatus & appliances (min 8 points).	U	1	
	b)	Discuss various properties & uses of following conducting material i) Zinc ii) Tin iii) Tungston iv) Mercury.	R	1	
	c)	Enlist the conducting material used as resistors in electrical apparatus & accessories & explain their uses & properties (min. four)	U	1	

P.T.O

	d)	Draw neat labeled diagram of magnetic hysteresis loop of ferromagnetic material & explain the following i) Coercive ii) Residual or Remainant magnetic flux or flux density iii) magnetic saturation.	U	2	
	e)	Comment on chemical properties of insulating materials. (any four properties)	R	3	
	f)	Enlist the classification of insulation on thermal basis (prepare tabular form of class, temperature ^{0}C & material)	R	3	
Q.4		Attempt any **FOUR**			**(08)**
	a)	Enlist any four tools used for electrical wiring practice.	U	4	
	b)	Give full form of ICDP and ICTP.	R	4	
	c)	Classify wiring systems used for electrical installations.	R	4	
	d)	Define the term Luminous flux. State its unit.	R	5	
	e)	Comments on "SWG" in electrical installations	R	4	
	f)	Stat laws of illumination.	R	5	
Q.5		Attempt any **FOUR**			**(16)**
	a)	Enlist the types of wires used for installation & draw the sketches of wires.	U	4	
	b)	State the advantages and disadvantages of concealed system of wiring.	U	4	
	c)	State the types of switches available in market with their specifications.	U	4	
	d)	Discus the working & application of ELCB [sketch not required]	U	4	
	e)	Write different types of lighting arrangements.	A	5	
	f)	Discuss various factors taken into account at the time of designing a illumination / light scheme	A	5	
Q.6		Attempt any **TWO**			**(16)**
	a)	i) State the reason why controlling switch must be connected in the live wire.	U	4	
		ii) Explain the necessity of fuse.	U	4	
	b)	i) Define "Space-height ratio & utilization factor.	U	5	
		ii) Draw stair case wiring & explain its working.	A	4	
	c)	A Hall 30m x 40m x height 4m requires on average illumination of 110 lux on the working plane which is 1m above the floor. Two types of filament lamps are available i) 200-W lamps with luminous efficiency =18 lumens/Watt ii) 500 Watts lamps with luminous efficiency = 22 lumens/Watt Utilisation factor is 0.4 and depreciation factor is 0.8 Estimate the no. of tubes required i) Only 200 Watt ii) Only 500 Watt & total electrical load.	A	5	
		**********			

GOVERNMENT POLYTECHNIC, KOLHAPUR – 416004.

(An Autonomous Institute of Govt. Of Maharashtra)

ODD TERM END EXAM NOV./ DEC. -2017

EXAM SEAT NO. | | | | | | |

LEVEL : - **THIRD** PROGRAM : **ELECTRICAL**

COURSE CODE :- **EEE302/EE208**

COURSE NAME :- **D.C. MACHINES & TRANSFORMER**

MAX. MARKS : **80** TIME : **3 HRS.** DATE :- **20 / 11 / 2017**

Instruction :-

1) Answers must be written in the main answer book provided.(and supplements if required)
2) Figure to the right indicate marks.
3) Illustrate your answers with sketches wherever necessary.
4) Use of non-programmable pocket calculator is permissible.
5) Mathematical and other tables shall be made available on request.
6) Assume additional suitable data necessary.
7) Use of Mobile is strictly prohibited.

Marks

Q.1 Attempt any **FOUR** (08)

a) Give the classifications of D.C. generators .

b) List out applications of D.C. series motor.

c) List out the types of losses occurs in D.C. motor.

d) What is the function of single phase transformer?

e) Define Transformation Ratio. (k)

f) Compare ideal transformer with practical transformer.

Q.2 Attempt any **FOUR** (16)

a) Draw the constructional view of D.C. generator & explain function of each parts.

b) Explain operation and working principal of D.C. Generator.

c) What is the significance of back emf in d.c. motor?

d) Explain the principle of operation of D.C. motor.

e) Draw and explain phasor diagram for practical transformer for inductive load.

f) A 200 KVA, 3300/240V,50Hz single phase transformer has 80 turns on secondary winding. Calculate i) Primary and secondary current
ii) Maximum value of flux and
iii) Number of primary winding turns.

Q.3 Attempt any **FOUR** (16)

a) Draw and explain load characteristics of D.C. series generator.

b) A 6-pole lap-wound d.c. generator has 600 conductors on its armature. The flux per pole is 0.02 Wb. Calculate,
i) The speed at which the generator must be run to generate 300V,
ii) What would be the speed if the generator were Wave wound?

c) Explain the flux control method to control the speed of the D.C. series motor.

d) Derive the voltage equation of D.C. motor.

e) Why transformer rating is in KVA? Explain.

f) Draw the phasor diagram for ideal Transformer. And explain its components.

P.T.O

Q.4 Attempt any **FOUR** (08)

a) Define all day efficiency of a transformer.

b) Give any two applications of 3 phase autotransformer.

c) State the conditions for maximum efficiency of a transformer.

d) Define voltage regulation of transformer.

e) List the different connection of three phase transformer.

f) State working principle of single phase transformer.

Q.5 Attempt any **FOUR** (16)

a) State and explain various conditions of parallel operation of single phase and three phase transformer.

b) Explain construction and winding connections of three phase transformers.

c) State the need for parallel operation of transformer.

d) With the help of connection diagram explain working principle of single phase autotransformer.

e) Explain with the help of circuit connection diagram how will you determine efficiency by O.C. & S.C. tests?

f) Explain working principle and application of three phase auto transformer.

Q.6 Attempt any **TWO** (16)

a) Draw the equivalent circuit of a transformer with
i) Primary quantities referred to secondary side
ii) secondary quantities referred to the primary side.

b) With the help of circuit connection diagram explain determination of efficiency and regulation of a transformer by direct loading method.

c) Draw and explain High voltage and Low voltage winding connections of 3-phase transformer connected in Star and Delta. Draw $Y-Y$, $\Delta-\Delta$, $\Delta-Y$, $Y-\Delta$.

****

GOVERNMENT POLYTECHNIC, KOLHAPUR – 416004.

(An Autonomous Institute of Govt. Of Maharashtra)

ODD TERM END EXAM NOV. / DEC. -2017

EXAM SEAT NO. | | | | | | |

LEVEL : - **THIRD** PROGRAM : **ELECTRICAL ENGINEERING**

COURSE CODE :- **EEF306 /EEE303/EE211**

COURSE NAME :- **ELECTRICAL POWER GENERATION**

MAX. MARKS : **80** TIME : **3 HRS.** DATE :- **08/ 12 / 2017**

Instruction :-

1) Answers must be written in the main answer book provided.(and supplements if required)
2) Illustrate your answers with sketches wherever necessary.
3) Use of non-programmable pocket calculator is permissible.
4) Mathematical and other tables shall be made available on request.
5) Assume and mention suitable additional data if necessary.
6) Use of Mobile is strictly prohibited.
7) QN > Question No., SQN> Question No. R> Remembering, U> Understanding, A> Application.

QN	SQN	Question Text	R/U/A	CO Code EEF306	Marks
Q.1		Attempt any **FOUR**			**08**
	a)	Define 'Enthalpy'..	R	3	
	b)	Outline about 'Shielding' in case of nuclear power station.	R	3	
	c)	State the types of fuels in electrical power generation with one example.	U	1	
	d)	Interpret the 'load duration curve'.	R	3	
	e)	List the types of pollution due to thermal power station.	R	2	
	f)	Give the operating grid voltage in case of state grid and national grid.	R	2	
Q.2		Attempt any **FOUR**			**16**
	a)	Explain i) Spill ways ii) Forbay iii) Surge tank iv) Tail race.	R	3	
	b)	Explain how the control of nuclear reactor carried out by using control rods.	U	3	
	c)	Describe in brief the various environmental issues of electrical power generation.	R	1	
	d)	List the major auxiliaries of thermal power station. Explain super-heater in brief.	U	3	
	e)	Discuss the important points to be taken into consideration while selecting size and number of generator units.	A	2	
	f)	Draw a labeled sketch of Boiling Water Reactor and explain in brief.	A	3	

P.T.O.

QN	SQN	Question Text	R/U/A	CO Code EEF306	Marks
Q.3		Attempt any **FOUR**			**16**
	a)	Explain Rankine cycle in case of thermal power station.	U	3	
	b)	List the safety practices in hydro power station.	U	3	
	c)	Explain the methods to reduce the pollution due to thermal power station.	U	3	
	d)	Describe i) Blackout ii) Brownout.	U	2	
	e)	Define the terms i) Firm power ii) Spinning reserve iii) Hot reserve iv) connected load.	R	2	
	f)	Explain in brief the generation of electrical power with major components.	U	1	
Q.4		Attempt any **FOUR**			**08**
	a)	State need of solar energy.	R	4	
	b)	State types of photovoltaic cell.	R	4	
	c)	State classification of wind turbine.	R	4	
	d)	Write calorific value of Bio-gas.	R	5	
	e)	State two limitations of tidal power plant.	R	5	
	f)	Write down the principle of Geothermal energy.	R	6	
Q.5		Attempt any **FOUR**			**16**
	a)	Draw and explain series parallel connections of cell.	U	4	
	b)	Draw Block diagram of wind power plant and explain function of each part in brief.	U	4	
	c)	State and explain types of Bio Gas plant. (any one with suitable diagram)	U	5	
	d)	Draw and explain open cycle turbine system in ocean thermal electric conversion (OTEC)	U	5	
	e)	Explain Bio-mass based power generation plant.			
	f)	Draw and explain construction and working of fuel cell.	U	6	
Q.6		Attempt any **FOUR**			**16**
	a)	Draw and explain P-V characteristics.	A	4	
	b)	State selection of site for wind power plant.	A	4	
	c)	State advantages of tidal power plant.	A	5	
	d)	State liminations of Geothermal power plant.	A	6	
	e)	State advantages of fuel cell.	A	6	
	f)	Write down applications of Magneto hydro Dynamic.	A	6	

****

GOVERNMENT POLYTECHNIC, KOLHAPUR 416004.

(An Autonomous Institute of Govt. of Maharashtra)

ODD TERM END EXAM NOV/DEC -2017

EXAM SEAT NO. | | | | | | |

LEVEL: **THIRD** PROGRAM: **ELECTRICAL ENGINEERING.**

COURSE CODE: **EEF303/EE206/EEE201** COURSE NAME: **BASIC ELECTRONICS.**

MAX. MARKS: **80** TIME: **3 HRS.** DATE: **02/12/2017**

Instruction:-

1) Answers must be written in the main answer book provided. (and supplements if required)
2) Illustrate your answers with sketches where ever necessary.
3) Use of non-programmable pocket calculator is permissible.
4) Mathematical and other tables will be made available on request.
5) Assume and mention suitable additional data necessary.
6) Use of Mobile is strictly prohibited.
7) **QN**>Question No, **SQN**>Sub-Question No, **R**> Remembering, **U**>Understanding, **A**>Application CO>Course outcome

---

QN	S. Q. N	Question Text	R U A	CO EEF 303	Marks
Q.1		Attempt any **FOUR**			**(08)**
	a)	Define 'Depletion layer.'	**R**	**1**	
	b)	Classify rectifier. Give its working principle.	**R**	**2**	
	c)	Draw DC load line for transistor and locate 'Q' point on it.	**A**	**3**	
	d)	State types of biasing for diode. Give barrier potential for silicon and Germanium.	**R**	**1**	
	e)	Enlist biasing methods of transistor.	**R**	**3**	
	f)	Classify filters.	**R**	**2**	
Q.2		Attempt any **FOUR**			**(16)**
	a)	Draw biasing of zener diode. Explain why it is called as 'voltage stabilizer.'	**A**	**1**	
	b)	Compare series and shunt voltage regulator. (any 4 points)	**U**	**2**	
	c)	'Transistor can be used as a switch' prove.	**A**	**3**	
	d)	Draw and explain input V-I characteristics of a diode.	**U**	**1**	
	e)	Compare full wave rectifier and bridge rectifier on the basis of, i) No. of diodes required. ii) Requirement of centre tap transformer. iii) PIV of diode. iv) Circuit diagram.	**U**	**2**	
	f)	Enlist modes of operation of transistor. For amplification purpose in which mode should a transistor operate ? Give reason.	**A**	**3**	
Q.3		Attempt any **FOUR**			**(16)**
	a)	Derive equation showing relation between α & β.	**A**	**3**	
	b)	For a circuit, the output should be constant at 9V. Use a zener diode & draw the operational circuit. Also draw V-I characteristics showing constant voltage.	**A**	**1**	

P.T.O.

	c)	Draw waveforms of full wave rectifier with capacitor filter.			
	d)	Draw experimental setup for obtaining output characteristics of NPN transistor. Draw output V-I characteristics of transistor.	A	3	
	e)	Compare PN junction diode and zener diode. (2 points). Give two applications of each diode.	U	1	
	f)	Define : (i) Rectifier efficiency. (ii) Ripple factor. Give values of above for - (i) Half wave rectifier. (ii) Full wave rectifier.	R	2	
Q.4		Attempt any **FOUR**			**(08)**
	a)	Give any two specifications of PCB.	R	6	
	b)	Draw the symbol of following device, i) Photo transistor. Ii) Photodiode.	R	5	
	c)	Draw the symbols and logical equation for i) AND ii) NOR gate.	R	4	
	d)	Enlist any four applications of opto-couplers.	R	5	
	e)	State applications of photodevices.	R	5	
	f)	State associative law of Boolean Algebra.	R	4	
Q.5		Attempt any **FOUR**			**(16)**
	a)	State and prove De-morgan's theorems.	U	4	
	b)	Enlist various steps involved for development of PCB.	U	6	
	c)	Explain construction & working of photo diode.	U	5	
	d)	Define etching process & explain it in detail.	U	6	
	e)	With neat diagram explain Batch-counter in detail.	U	5	
	f)	Simplify following expressions, i) $Y=(A+B)(\bar{A}+B)(A+\bar{B})$ ii) $Y=AB+ABC+A\bar{B}+\bar{A}\bar{B}C$	A	4	
Q.6		Attempt any **FOUR**			**(16)**
	a)	For full wave rectifier circuit, Enlist steps involved for PCB designing.	A	6	
	b)	Explain working principle of opto–couplers.	U	5	
	c)	Convert following expressions into standard SOP, i) $AC+CD+BC$ ii) $\bar{A}(B+\bar{C})$	A	4	
	d)	Explain working principle of Burglar alarm system.	U	5	
	e)	Draw the symbols & truth tables for, i) NAND gate. Ii) EX-OR.	U	4	
	f)	State the basic rules of designing the PCB layout. *****	U	6	

GOVERNMENT POLYTECHNIC, KOLHAPUR – 416004.

(An Autonomous Institute of Govt. Of Maharashtra)

ODD TERM END EXAM NOV. / DEC. -2017

EXAM SEAT NO. | | | | | | |

LEVEL : - **THIRD** PROGRAM : **ELECTRICAL ENGINEERING**

COURSE CODE :- **EEF304/ EEE310/ EE204/EE205/ EEE306**

COURSE NAME :- **ELECTRICAL MEASUREMENT & INSTRUMENTATION**

MAX. MARKS : **80** TIME : **3 HRS.** DATE :- **04/ 12 / 2017**

Instruction :-

1) Answers must be written in the main answer book provided.(and supplements if required)
2) Illustrate your answers with sketches wherever necessary.
3) Use of non-programmable pocket calculator is permissible.
4) Mathematical and other tables shall be made available on request.
5) Assume and mention suitable additional data if necessary.
6) Use of Mobile is strictly prohibited.
7) QN > Question No., SQN> Question No. R> Remembering, U> Understanding, A> Application.

QN	SQN	Question Text	R/U/A	CO Code EEF304	Marks
Q.1		Attempt any **FOUR**			**08**
	a)	State the type of instruments is used for D.C. measurements only.	R	1	
	b)	Define accuracy and precision of measuring instruments.	R	2	
	c)	The scale of moving iron instrument is non-uniformly graduated. Explain.	U	1	
	d)	Explain method employed to find insulation resistance of live wire.	A	2	
	e)	Explain an electrical energy meter.	U	3	
	f)	Write the classification of wattmeters.	R	2	
Q.2		Attempt any **FOUR**			**16**
	a)	Write any two advantages and two limitations of one wattmeter method for 3 phase power measurement.	U	3	
	b)	Name any four parts of PMMC instrument and state function of each.	R	1	
	c)	Describe the principle of Wheatstone bridge and derive the formula for balance condition.	U	2	
	d)	Draw a block diagram of digital energy meter.	U	3	
	e)	Draw a well labeled diagram of Kelvin's bridge. Also state the balancing criteria of a bridge.	U/A	2	
	f)	Draw the circuit diagram and phasor diagram for measurement of reactive power in 3 phase balanced, star connected load by one wattmeter.	U	3	
Q.3		Attempt any **FOUR**			**16**
	a)	Explain method to measure inductance using Maxwell Bridge.	U	2	
	b)	Explain working of the digital LCR meter.	U	2	
	c)	Explain the working of Tri-vector meter	U	3	
	d)	Draw and explain measurement of active power of 3 phase circuit for balanced load by using two wattmeter methods.	U	3	
	e)	Explain the working of digital voltmeter and ammeters with their advantages.	U	1	
	f)	Draw & explain the working of dynamometer type instrument.	U/A	1	

P.T.O

QN	SQN	Question Text	R/U/A	CO Code EEF304	Marks
Q.4		Attempt any **FOUR**			**08**
	a)	Write two advantages of extending the measurement range of instruments.	U	4	
	b)	Explain transducer in general.	U	5	
	c)	Define Lissajous figures.	R	6	
	d)	Write down the minimum number of coils required in a 3 phase power factor meter.	U	4	
	e)	Compare the mechanical and electrical transducers on any two points.	U	5	
	f)	Define signal conditioning.	R	6	
Q.5		Attempt any **FOUR**			**16**
	a)	Explain the methods used to extend the range of a voltmeters.	A	5	
	b)	Draw labeled block diagram of DC signal conditioning system.	U	6	
	c)	Explain using the relevant diagrams the extension of range for an energy meter to be used for tension energy measurements.	A	4	
	d)	Describe the working of the strip chart recorder. Write down two of its applications with proper justifications.	U/A	6	
	e)	Explain with neat diagram the working and application of the synchroscope.	U/A	4	
	f)	Draw a neat labeled sketch of the CRO and write down the function of at least four controls in it.	U/A	6	
Q.6		Attempt any **FOUR**			**16**
	a)	Explain using proper diagrams the application of the LVDT in any one industrial situation.	U/A	5	
	b)	Explain the various factors that govern the selection of transducers for industrial applications.	U/A	5	
	c)	Compare the working and application method of the bonded and un-bonded strain gauges.	U/A	5	
	d)	Describe using simple figures the working of the piezoelectric transducers giving one concrete example.	U/A	5	
	e)	Explain the working of the thermocouple type of transducers using proper sketchs for temperature measurement. Give two industrial applications where they are used.	U/A	5	
	f)	Explain the working of the diaphragm type transducer using proper sketches. State one application of the same.	U/A	5	

****

GOVERNMENT POLYTECHNIC, KOLHAPUR – 416004.

(An Autonomous Institute of Govt. Of Maharashtra)

ODD TERM END EXAM NOV./ DEC. -2017

EXAM SEAT NO. | | | | | – | |

LEVEL : - **THIRD** PROGRAM : **ELECTRICAL ENGINEERING**

COURSE CODE :- **EEE304 / EE310**

COURSE NAME :- **APPLIED ELECTRONICS**

MAX. MARKS : **80** TIME : **3 HRS.** DATE :- **04/ 12 / 2017**

Instruction :-

1) Answers must be written in the main answer book provided.(and supplements if required)
2) Figure to the right indicate marks.
3) Illustrate your answers with sketches wherever necessary.
4) Use of non-programmable pocket calculator is permissible.
5) Mathematical and other tables shall be made available on request.
6) Assume additional suitable data necessary.
7) Use of Mobile is strictly prohibited.

Marks

Q.1 Attempt any **FOUR** (08)

a) State any four characteristics of class 'A' power amplifier.

b) Draw circuit diagram of transistor in 'CB' configuration.

c) State Barkhausen's criteria of oscillation.

d) Draw circuit diagram of tuned collector oscillator.

e) Define i) Rise time ii) Fall time.

f) Draw circuit diagram of Monostable Multivibrator.

Q.2 Attempt any **FOUR** (16)

a) Compare RC coupled amplifier and transformer coupled amplifier (any four points)

b) Explain working of class B push pull amplifier with neat circuit diagram.

c) Draw circuit diagram of Hartley oscillator and explain its working.

d) Explain the parameters, on which oscillator's Frequency Stability depends?

e) Explain how transistor works as a switch.

f) Explain working of Schmitt trigger with diagram.

Q.3 Attempt any **FOUR** (16)

a) Explain transistor amplifier in CE configuration.

b) Explain direct coupled amplifier with diagram.

c) Draw circuit diagram of crystal oscillator and explain its working.

d) Differentiate between RC & LC oscillator (any four points)

e) Compare Astable, Monostable and Bistable multivibrator (any four points)

f) In an astable multivibrator, two base resistor, $R_1 = R_2 = 10\ K\Omega$, two timing capacitors, $C_1 = C_2 = 3.3\ \mu f$. Calculate time period of oscillation and frequency of oscillation.

P.T.O.

Q.4 Attempt any **FOUR** (08)

a) Draw symbol of i) DIAC ii) PUT.

b) Draw construction and symbol of TRIAC.

c) Draw V-I characteristics of UJT and label its all regions.

d) List different triggering methods.

e) Draw symbol of i) LASCR ii) Photo transistor.

f) Draw construction of LDR.

Q.5 Attempt any **FOUR** (16)

a) Draw symbol and constructional diagram of IGBT and label it properly and explain its principle of operation.

b) Draw and explain two transistor analogy of SCR.

c) Draw and explain snubber circuit.

d) Draw phase control by R-triggering circuit and explain.

e) What is opto coupler? Draw its diagram and state its use.

f) Draw and explain class –F commutation.

Q.6 Attempt any **FOUR** (16)

a) Draw and explain phase control UJT triggering method.

b) Draw circuit diagram of RC full wave triggering circuit and explain.

c) Draw and explain construction of power MOSFET.

d) Differentiate natural commutation and forced commutation. (any four points)

e) Draw circuit diagram and waveform of class - C commutation.

f) Draw and explain Burglar alarm.

****

GOVERNMENT POLYTECHNIC, KOLHAPUR – 416004.

(An Autonomous Institute of Govt. Of Maharashtra)

ODDTERM END EXAM NOV./ DEC. -2017

EXAM SEAT NO. | | | | | | |

LEVEL : - **THIRD** PROGRAM : **INFORMATION TECHNOLOGY**
COURSE CODE :- **ITE307**
COURSE NAME :- **OPERATING SYSTEM**
MAX. MARKS : **80** TIME : **3 HRS.** DATE :- **21 / 11 / 2017**

Instruction :-
1) Answers must be written in the main answer book provided.(and supplements if required)
2) Figure to the right indicate marks.
3) Illustrate your answers with sketches wherever necessary.
4) Use of non-programmable pocket calculator is permissible.
5) Mathematical and other tables shall be made available on request.
6) Assume additional suitable data necessary.
7) Use of Mobile is strictly prohibited.

Marks

Q.1 Attempt any **FOUR** (08)

a) What is an operating system?

b) What is system call?

c) Enlist different categories of system program.

d) What are four major activities of an operating system with regards with memory management ?

e) Define Process.

f) Define system boot.

Q.2 Attempt any **FOUR** (16)

a) Explain Real time system.

b) Explain layered structure of operating system.

c) Draw and explain process state diagram.

d) Explain features of Batch operating system.

e) Explain in detail various services provided by operating system.

f) Explain Multithreading Models.

Q.3 Attempt any **FOUR** (16)

a) Write down generations of operating system.

b) Explain distributed system.

c) Explain system call for device management.

d) Describe networking and protection system.

e) What is scheduler? Explain types of schedulers.

f) Explain IPC model.

RTO.

Q.4 Attempt any **FOUR** (08)

a) Define i) Response time ii) Turnaround time.

b) Enlist necessary conditions for deadlock.

c) What is external fragmentation?

d) State typical attributes of file.

e) Explain the term-starvation of process.

f) What is limitation of single level directory?

Q.5 Attempt any **FOUR** (16)

a) Compare between sequential access and direct access of files.

b) Explain logical Vs physical address space.

c) List and explain any four operations on file.

d) Define i) Port ii) Controller iii) Bus iv) Device driver.

e) What is Resource-Allocation graph? How does it help in detecting deadlock?

f) Explain use of buffering.

Q.6 Attempt any **TWO** (16)

a) Describe basic method of implementing paging with example.

b) Explain steps in DMA transfer.

c) i) Explain priority scheduling with example. (04)
ii) Consider following set of processes, with length of CPU burst in milliseconds. (04)

Process	Burst time
P_1	06
P_2	03
P_3	02
P_4	03
P_5	05

The processes are assumed to have arrived in order P_1 , P_2 , P_3 , P_4 , P_5 all at time 0.

Draw Gantt chart that illustrate execution of these processes using
1) FCFS scheduling 2) RR scheduling (Quantum = 2)

****

GOVERNMENT POLYTECHNIC, KOLHAPUR – 416004.

(An Autonomous Institute of Govt. Of Maharashtra)

ODD TERM END EXAM NOV. / DEC. 2017

EXAM SEAT NO. | | | | | | |

LEVEL : - **FIFTH** PROGRAM : **INFORMATION TECHNOLOGY**

COURSE CODE :- **ITE503**

COURSE NAME :- **MANAGEMENT OF INFORMATION SYSTEM**

MAX. MARKS : **80** TIME : **3 HRS.** DATE :- **22 / 11 / 2017**

Instruction :-

1) Answer to two sections must be written in separate section answer book provided.
2) Figure to the right indicate marks.
3) Illustrate your answers with sketches wherever necessary.
4) Use of non-programmable pocket calculator is permissible.
5) Mathematical and other tables shall be made available on request.
6) Assume additional suitable data necessary.
7) Use of Mobile is strictly prohibited.

Section – I Marks

Q.1 Attempt any **FOUR** (08)

a) Draw the physical view of MIS.

b) What is mean by Growth Strategy?

c) Define what_if analysis.

d) Draw the generalized model of system.

e) State the purpose of sensor and corrective unit in system control.

f) Define system Engineering.

Q.2 Attempt any **FOUR** (16)

a) Explain the conceptual view of MIS.

b) Describe any four essentials of strategic planning.

c) Write a note on market strategy and product strategy.

d) Explain organizational decision making.

e) Describe the information presentation and bias in information.

f) Explain the types of system Engineering.

Q.3 Attempt any **FOUR** (16)

a) Write a note on MIS & the user.

b) Explain any four dimensions of planning.

c) List and explain characteristics of system approach.

d) List and explain problems in making rational decision.

e) Write a note on Decision analysis by analytical modelling.

f) Explain the need of system analysis.

P.T.O.

Section – II

Marks

Q.4 Attempt any **FOUR** (08)

a) Define Data and Atomic data entity.

b) Enlist applications of MIS in manufacturing sector.

c) State objective of TQM in information system.

d) What is re-engineering? State Business process re-engineering process.

e) State methods of determining the information requirement.

f) Enlist different classes of information for MIS design.

Q.5 Attempt any **FOUR** (16)

a) Explain model of MIS plan with contents. and particulars.

b) Explain process model of the organization for business process reengineering.

c) Explain data processing for information system design.

d) Discuss issues of human factors and user interface for information system design.

e) How MIS will be useful in Airline service? Explain the information part on which MIS will focus.

f) Explain Relation of MIS & BPR.

Q.6 Attempt any **FOUR** (16)

a) Match the pairs

1) Personnel Management	i) Data Processing
2) Insurance	ii) Manufacturing Sector Application
3) Confirming the character, data structure	iii) Transaction Processing.
4) Confirming Internal consistency & Correctness Of data	iv) Service sector application

b) Explain application of MIS in Marketing Management.

c) Explain features contributing to success of MIS.

d) Explain application processing.

e) How BPR & Information Technology Relevant? Explain.

f) Explain reasons of delays for business process.

****

GOVERNMENT POLYTECHNIC, KOLHAPUR 416004.

(An Autonomous Institute of Govt. of Maharashtra)

ODD TERM END EXAM NOV/DEC -2017

EXAM SEAT NO. | | | | | | |

LEVEL: **FIRST** PROGRAM: **COMMON**

COURSE CODE:**CCF108 /R110/X107/110/CCE108** COURSE NAME: **ENGINEERING DRAWING -II**

MAX. MARKS: **80** TIME: **4 HRS.** DATE: **22/11/2017**

Instruction:-

1) Answer to each section must be written in separate answer book.
2) Illustrate your answers with sketches where ever necessary.
3) Use of non-programmable pocket calculator is permissible.
4) Mathematical and other tables will be made available on request.
5) Assume and mention suitable additional data necessary.
6) Use of Mobile is strictly prohibited.
7) **QN**>Question No, **SQN**>Sub-Question No, **R**> Remembering, **U**>Understanding, **A**>Application **CO**>course outcome

---

QN	SQN	Question Text	RUA	CO CCF108-	Marks
Q.1		Attempt any **TWO**			(08)
	a)	Illustrate following joints with their symbols i) Spot weld ii) Single- J butt weld	U	3	
	b)	Draw free hand sketch for 'V' thread.	U	3	
	c)	Draw free hand sketch for wing nut.	U	3	
Q.2		Attempt any **TWO**			(16)
	a)	Draw the following orthographic views of the object as shown in fig.1. i) Sectional F.V (03 marks) ii) Side view from left (03 marks) iii) Top view (02 marks)	U	1	
	b)	Fig.2 shows pictorial view of an object using first angle projection method, draw i) Front view (03 marks) ii) Top view (02 marks) iii) Sectional left hand side view(03 marks) iv) Give important dimensions.	U	2	
	c)	Fig 3.Shows pictorial view of an object, Draw i) Sectional F.V(03 marks) ii) Top view (02 marks) iii) Right hand side view (03 marks)	U	2	
Q.3		Attempt any **TWO**			(16)
	a)	Fig.4 shows pictorial view of an object. Draw following views of an object by using first angle method. i) F.V. in the direction X (03 marks) ii) Top view (02 marks) iii) Right hand side view (03 marks)	U	2	

P.T.O

	b)	By using first angle method, draw i) F.V. in the direction X (03 marks) ii) Top view (02 marks) iii) Left hand side view (03 marks) Refer Fig.5	U	2	
	c)	Fig 6 show pictorial view of an object using first angle method of projection , draw i) Front view (03 marks) ii) Top view (02 marks) iii) Right hand side view(03 marks)	U	2	
Q.4		Attempt any **ONE**			(08)
	a)	Figure no.4 (a) shows two views of an object. Draw by using first angle projection method the following views. i) Sectional elevation (section A-A) (04 marks) ii) Left hand side view (missing view) (04 marks)	U	4	
	b)	Fig.4 (b). Shows elevation and plan of a machine part. Draw the following views, by using first angle method of projection. i) Sectional elevation (section A-A) (04 marks) ii) Left hand side view (missing view) (04 marks)	U	4	
Q.5		Attempt any **ONE**			(16)
	a)	Fig. no 5 (a). Shows two views of an object. Draw its isometric view, taking 'O' as an origin. Use natural scale.	U	5	
	b)	i) Construct isometric scale upto 150mm (02 marks) ii) Fig. no 5 (b) (ii) shows two views of an object. Draw its isometric projection taking 'O' as an origin by isometric scale. (14 marks)	U	5	
Q.6		Attempt any **TWO**			(16)
	a)	Figure no. 6 (a) shows front view and top view of an a square prism, having a circular hole in the center. Draw its development of the surface.	U	6	
	b)	Figure no 6 (b) shows front view of cone, resting in H.P in first quadrant, cut by three different planes I, II, III. Draw the development of the lateral surface of this cut cone.	U	6	
	c)	Figure no 6 (c) shows front view of a right square pyramid with the sides of base equally inclined to V.P, resting on its base H.P. It is cut by two sectional planes A&B at 60^0 to each other as shown in fig. no 6(c). Draw the development of the lateral surface of the pyramid.	U	6	

****

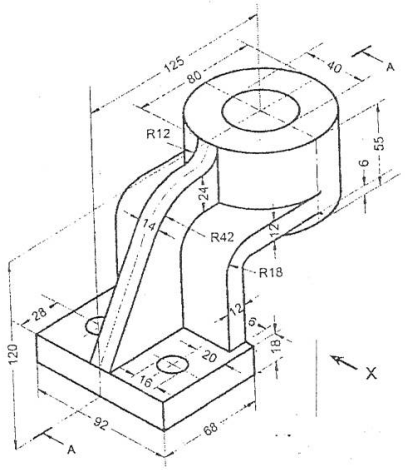

Fig. 1

Q. 2 (a)

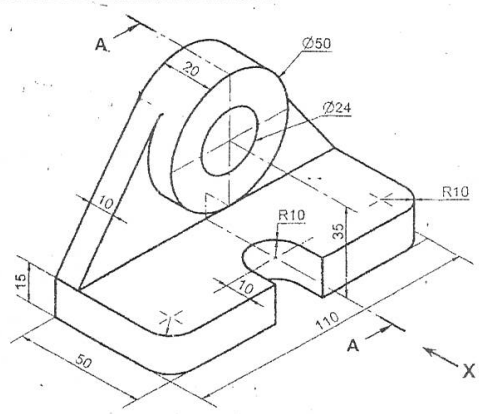

Fig. 2

Q. 2 (b)

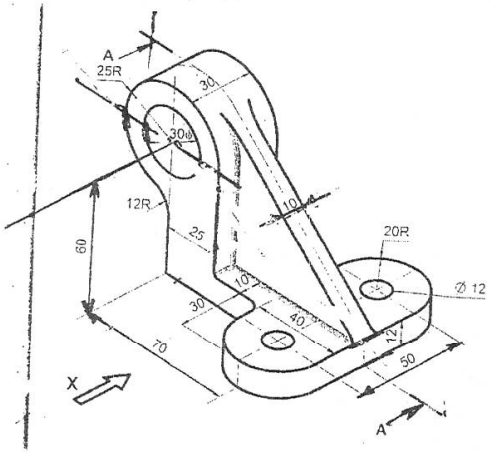

Fig. 3

Q. 2 (c)

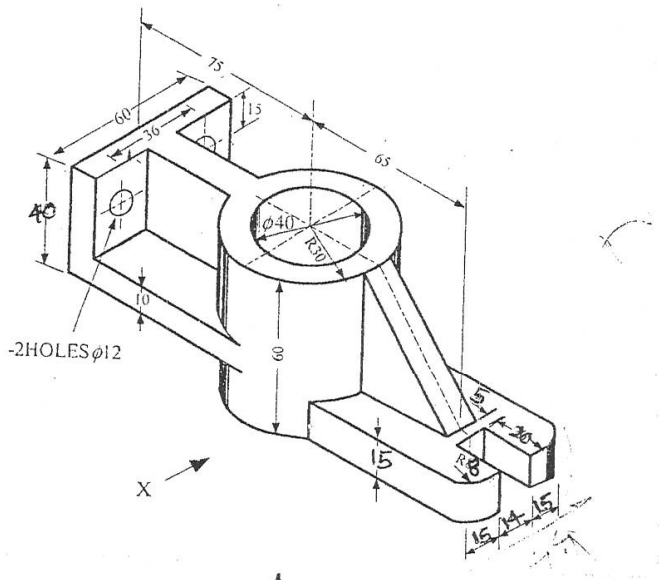

Fig. 4

Q. 3 (a)

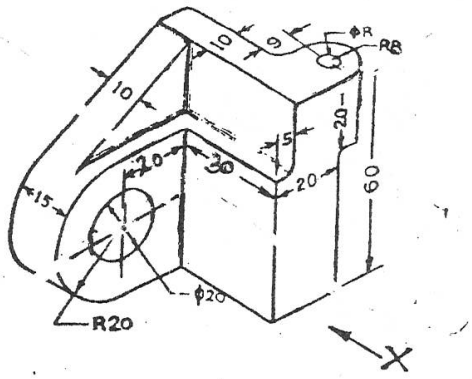

Fig. 5

Q. 3 (b)

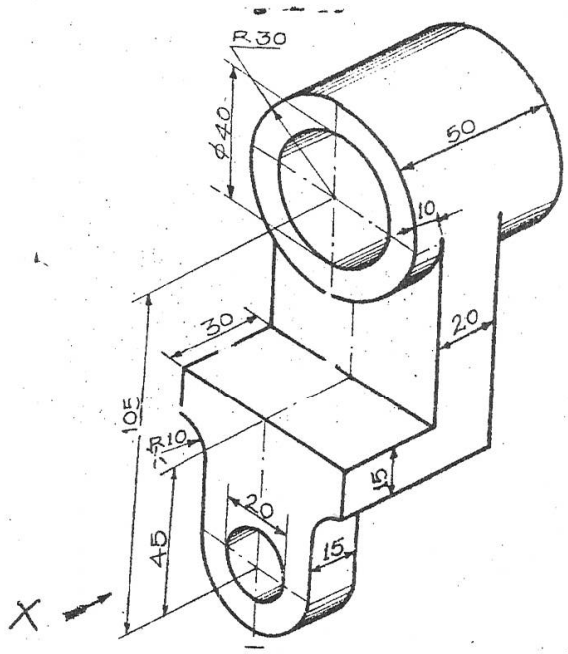

Fig. 6

Q. 3 (c)

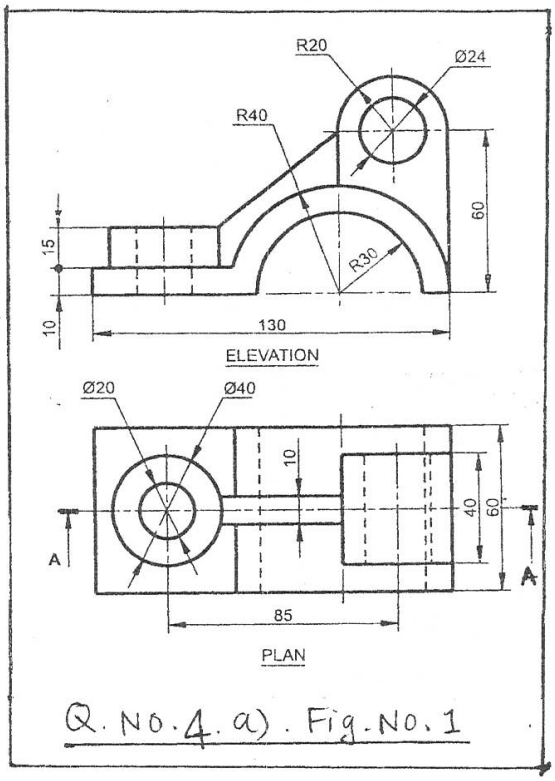

Q. No. 4. a). Fig. No. 1

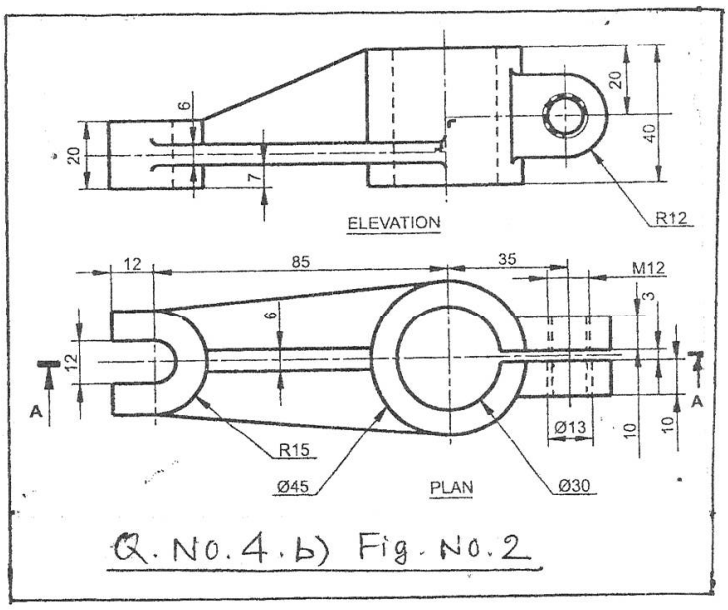

Q. No. 4. b) Fig. No. 2