GOVERNMENT POLYTECHNIC, KOLHAPUR 416004.

(An Autonomous Institute of Govt. of Maharashtra)

EVEN TERM END EXAM APRIL/MAY -2017

EXAM SEAT NO. | | | | | | |

LEVEL: **FIRST** PROGRAM: **COMMON**

COURSE CODE: **CCF106/CCE106/X110/R108/0108**

COURSE NAME: **ENGINEERING MATHEMATICS**

MAX. MARKS: **80** TIME: **3 HRS.** DATE: **06/05/2017**

Instruction:-

1) Answers must be written in the main answer book provided. (and supplements if required)
2) Figure to the right indicates marks.
3) Illustrate your answers with sketches wherever necessary.
4) Use of non-programmable pocket calculator is permissible.
5) Mathematical and other tables shall be made available on request.
6) Assume additional suitable data necessary.
7) Use of Mobile is strictly prohibited.

Q.1 Attempt any **FOUR** **Marks (08)**

a) Find the centroid of a triangle whose vertices are (1, 4) (2, 3) (0, -1)

b) Find the distance between the parallel lines $3x+2y-8=0$ and $3x+2y-4=0$

c) Find the acute angle between the lines $3x-2y+4=0$ *and* $2x-3y-7=0$

d) Find the equation of a circle whose center is at origin and radius 5

e) Find the equation of a circle whose diameter is the line segment joining the points (9, 0) & (0, 6)

f) Starting with the approximations $x_0=y_0=z_0=0$, for solving a set of equations by Gauss-Seidel method. If the next approximation gives $x_1=0.85,\ y_1=1.0275$. Find z_1. Given that $z=\frac{1}{10}[25-2x+3y]$

Q.2 Attempt any **FOUR** **(16)**

a) Show that the points (-2, 1), (-1, 3) and (1, 7) are collinear.

b) Determine which of the two circles is greater: $x^2+y^2-3x+4y=0$ and $x^2+y^2-6x+8y=0$

c) Find the equation of a circle passing through the point (2, 5) and (-5, 4) and whose center lying on the line $2x-3y+5=0$

d) Find the equation of a line passing through the points of intersection of the lines $2x+3y=13,\ 5x-y=7$ and passing through (1, -1)

e) Find the equation of perpendicular bisector of the join of A(-2, 3) and B(8, -1)

f) Use Jacobi's method to solve the equations $5x+2y+z=12,\ x+4y+2z=15$, $x+2y+5z=20$ (Third iterations only)

Q.3 Attempt any **FOUR** **(16)**

a) Using Gauss Seidel method solve $10x=2y+2z+6,\ 10y=x+2z+7,$ $10z=x+y+8$ (upto Third iterations)

b) Using Jacobi's method solve $5x-y-2z=-3,\ 3x+5y-z=10,\ -2x-y+4z=8$ (three iterations only)

c) Use Regula-Falsi method to solve $x^3-3x+5=0$ (upto second approximation)

d) Find $\sqrt[3]{29}$ by Regula-Falsi method upto second iteration

e) Find the square root of 12 by the method of bisection (upto 4 approximations)

f) Solve $x^3-6x+2=0$ by Bisection method (upto four iterations)

P.T.O

Q.4 Attempt any **FOUR** **(08)**

a) Test whether the function is even or odd if $f(x) = x^3 + 5\sin x$

b) Evaluate $\lim_{x \to 3} \frac{x^3 - 27}{x - 3}$

c) Evaluate $\lim_{x \to 0} \frac{\sin 5x}{3x}$

d) Find $\frac{dy}{dx}$ *if* $y = \cos^2 x$

e) Find $\frac{dy}{dx}$ *if* $y = \log(x^2 + 2x + 5)$

f) Find the slop of tangent to the curve $y = x^3$ *at* $x = 4$

Q.5 Attempt any **FOUR** **(16)**

a) If $y = f(x) = \frac{x+1}{x-1}$, $x \neq 1$ then show that $x = f(y)$

b) Evaluate $\lim_{x \to \frac{\pi}{4}} \frac{\sin x - \cos x}{x - \pi/4}$

c) If $y = x^y$ *prove that* $\frac{dy}{dx} = \frac{y^2}{x(1 - y\log x)}$

d) Find the derivative of $x.\sin^{-1} x$

e) Find $\frac{dy}{dx}$ *if* $y = \log\left[x + \sqrt{x^2 + a^2}\right]$

f) Discuss the stationary (Maximum & Minimum values) of $x^3 - 6x^2 + 9x - 2$

Q.6 Attempt any **FOUR** **(16)**

a) If $f(x) = 16^x + \log_2^x$ then find $f(1/4)$ $f(1/2)$

b) Evaluate $\lim_{x \to 4} \frac{x^4 - 64x}{\sqrt{x^2 + 9} - 5}$

c) Differentiate w. r. t x; $\tan^{-1}\left(\frac{x}{\sqrt{1 - x^2}}\right)$

d) Find $\frac{dy}{dx}$ *if* $13x^2 + 2x^2 y + y^3 = 1$

e) If $y = (\sin x)^{\log x}$ *find* $\frac{dy}{dx}$

f) If $x = a(\theta + \sin\theta)$, $y = a(1 - \cos\theta)$ *find* $\frac{dy}{dx}$

****

GOVERNMENT POLYTECHNIC, KOLHAPUR 416004.

(An Autonomous Institute of Govt. of Maharashtra)

EVEN TERM END EXAM APRIL/MAY -2017

EXAM SEAT NO. | | | | | | |

LEVEL: **FIFTH** PROGRAM: **MECHANICAL ENGINEERING**

COURSE CODE: **MEE503/ME404** COURSE NAME: **QUALITY MANAGEMENT**

MAX. MARKS: **80** TIME: **3 HRS.** DATE: **04/05/2017**

Instruction:-

1) Answer to two sections must be written in separate section answer book provided.
2) Figure to the right indicates marks.
3) Illustrate your answers with sketches wherever necessary.
4) Use of non-programmable pocket calculator is permissible.
5) Mathematical and other tables shall be made available on request.
6) Assume additional suitable data necessary.
7) Use of Mobile is strictly prohibited.

Section – I

Marks

Q.1 Attempt any **FOUR** **(08)**

a) List any four product features for manufacturing industry.

b) Define quality characteristics i) Conformance ii) Aesthetic.

c) What is effect of "quality circle" on individual characteristics of worker?

d) Give any two categories of cast associated with "internal failure cost".

e) Give any two categories of cost associated with "external failure cost".

f) Define "cost of quality".

Q.2 Attempt any **FOUR** **(16)**

a) Define "Maintainability". Describe the Maintainability measures.

b) Define "Inspection". Give the tasks involve in inspection function.

c) List the fundamental topics that to be included in quality policy.

d) Discuss the ways that management can support quality circle activities.

e) Give the specific purpose of "quality Audit".

f) Explain the "Appraisal cost" categories.

Q.3 Attempt any **FOUR** **(16)**

a) Explain the role of middle management.

b) Discuss the factors to be included in inspection plan.

c) Describe the contents of quality audit.

d) List the items to be included in audit report.

e) Give the responsibility of quality assurance.

f) Explain the "prevention cost" categories.

Section – II **Marks**

Q.4 Attempt any **FOUR** **(08)**

a) Define mode.

b) What is variation?

c) State Deming philosophy of TQM.

d) Define TQM.

e) Define bench marking.

f) List four benefits of ISO.

Q.5 Attempt any **FOUR** **(16)**

a) Define process capability and state how it is achieved.

b) State different SQC tools and explain anyone.

c) Explain the steps for $\overline{X}$ and 'R' charts.

d) Explain inherent and assignable source if variation.

e) List the principle of TQM and explain anyone.

f) Discuss the 'PDSA' cycle.

Q.6 Attempt any **FOUR** **(16)**

a) List characteristics of successful team.

b) Explain Juran Triology under continuous process improvement.

c) List seven tools of TQM and explain anyone of them.

d) What are applications of six sigma?

e) What is ISO 14000?

f) What is theory of 5S?

****

GOVERNMENT POLYTECHNIC, KOLHAPUR – 416004.

(An Autonomous Institute of Govt. Of Maharashtra)

EVEN TERM END EXAM April/ May 2017

EXAM SEAT NO. | | | | | | |

LEVEL : - **FIFTH** PROGRAM : **MECHANICAL ENGINEERING**

COURSE CODE :- **MEE505**

COURSE NAME :- **COMPUTER INTEGRATED MANUFACTURING**

MAX. MARKS : **80** TIME : **3 HRS.** DATE :- **19 / 04 / 2017**

Instruction :-

1) Answer to two sections must be written in separate section answer book provided.
2) Figure to the right indicate marks.
3) Illustrate your answers with sketches wherever necessary.
4) Use of non-programmable pocket calculator is permissible.
5) Mathematical and other tables shall be made available o request.
6) Assume additional suitable data necessary.
7) Use of Mobile is strictly prohibited.

Section – I

Marks

Q.1 Attempt any **FOUR** (08)

a) Give the classification of CNC machine.

b) Give advantages of CNC.

c) Give the functions that are expected of geometric modeling.

d) Give classification of various types of surfaces used in geometric modeling.

e) Give advantages of CAD/CAM.

f) List the major input/output devices used in CAD/CAM.

Q.2 Attempt any **FOUR** (16)

a) What are the important output devices used in CAD? Explain any one in detail.

b) With a neat diagram explain the working of a mouse (any one type)

c) Explain with figure solid modeling.

d) Explain various requirements from geometric model.

e) Compare CNC and DNC machine tools.

f) How CNC machines are classified? Describe open loop system.

Q.3 Attempt any **FOUR** (16)

a) What are the different modeling techniques in CAD? And compare them.

b) What is surface modeling? Explain its advantages, drawbacks and its applications.

c) Write any four properties to be desired in any geometric modeling (solids) system.

d) With the help of neat diagram, explain the working of CNC machine tool.

e) Differentiate between NC and CNC machines.

f) Write short note on DNC.

PTO

Section – II

Marks

Q.4 Attempt any **FOUR** (08)

a) What is a part programme? Discuss the steps in writing a programme.

b) Explain three degrees of freedom associated with a robot wrist with neat sketch.

c) Enlist the advantages of FMS by considering machine utilization, manufacturing lead times and flexibility in production scheduling.

d) What is a subroutine? In which mode the subroutine programme is written. Justify your answer and write any two advantages of writing a subroutine.

e) Explain SCARA robots with neat sketches enlist its two advantages.

f) Differentiate between fixed automation & flexible automation based on following points. i) Production rate ii) Flexibility to product design variation.
iii) Reprogramming ability.

Q.5 Attempt any **FOUR** (16)

a) Write a part programme for a job as shown in fig. 1. Take only finish cut. Take spindle speed= 1200rpm. Feed rate= 150 mm/min. Assume suitable machining data if required.

b) Explain the following components of FMS –
i) Machine tools and related equipments. ii) Material handling equipments.
iii) Computer control system. iv) Human labour.

c) What are the important characteristics for an industrial environment to promote the use of industrial robots to replace human labour? Enlist any four of them. Add a note on material handling applications of robots.

d) Enlist any four functions of sensors used in industrial robots. Classify and explain with neat sketches- sensors based on functions performed.

e) Define industrial robot. What are the advantages of using industrial robots with the respect of quality, working environment and cost effectiveness?

f) Define FMS. Explain the necessity of adopting flexibility in production on the basis of change of product and change in demand of product.

Q.6 Attempt any **FOUR** (16)

a) Refer fig. 2. It is a work piece which has four square pockets of 40mm X 40mm at the positions shown. Depth of profile to be milled is 3mm and z=0 is at the surface of flat plate. The tool should retract back to a position 5mm above the flat surface while moving from one position to other. Write the subroutine and call this subroutine in main programme to mill required square pockets. Assume suitable data if required.

b) Explain the following applications of industrial robots
i) Welding ii) Assembly operation.

c) Which are the different levels of automation? Also enlist limitations of automation related to i) Skills of worker ii) Requirement of labour force iii) Purchasing power.

d) State and explain different power sources used for industrial robots.

e) Explain the following equipments of FMS I) Machining center ii) Head indexer iii) Assembly work stations iv) Sheet metal processing machines.

f) List out various applications of FMS. Write any two benefits of FMS.

****

Q. 5 a)

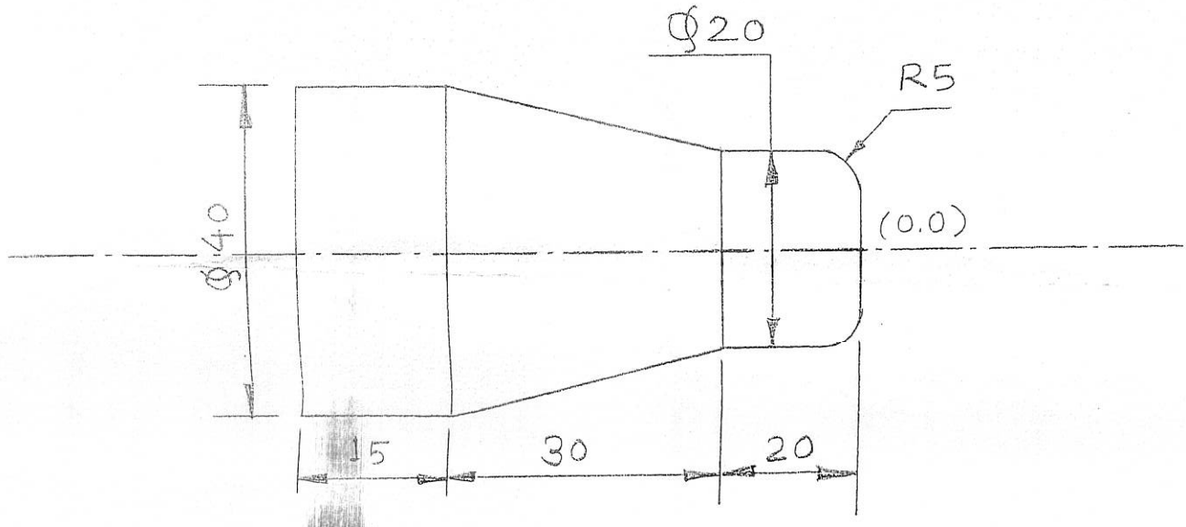

fig. 1

All dimensions are in mm

Q. 6 a)

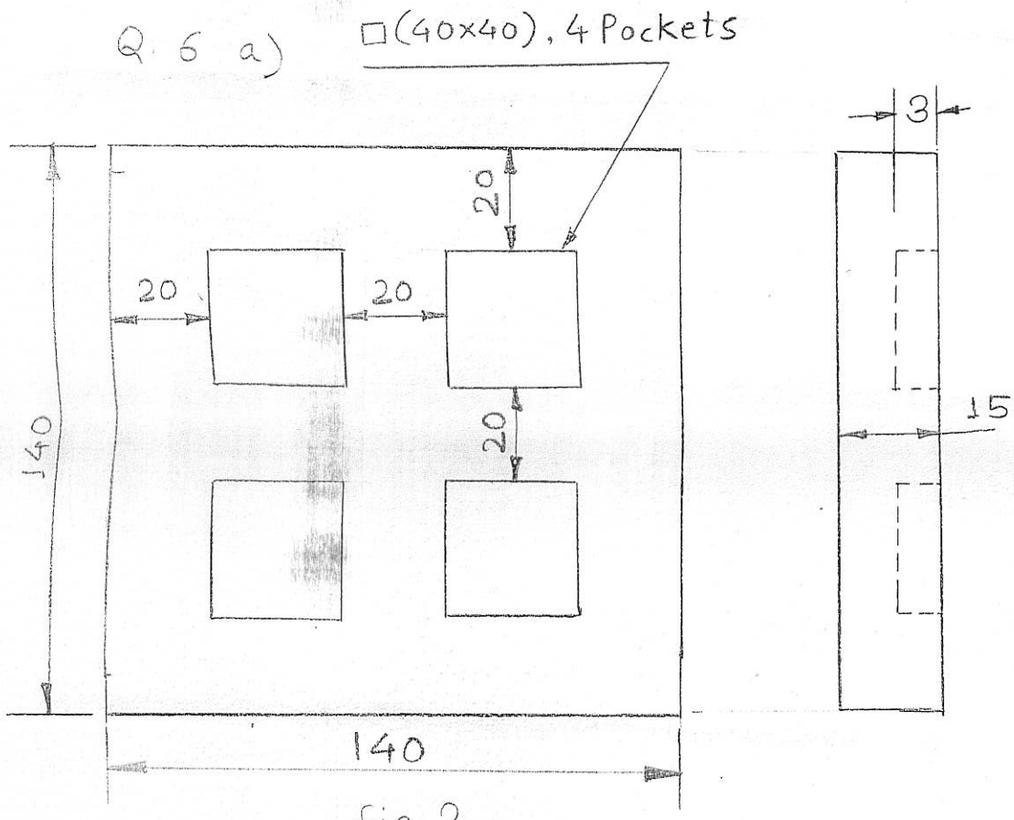

fig. 2

All dimensions are in mm

GOVERNMENT POLYTECHNIC, KOLHAPUR 416004.

(An Autonomous Institute of Govt. of Maharashtra)

EVEN TERM END EXAM APRIL/MAY -2017

EXAM SEAT NO. | | | | | | |

LEVEL: **FIFTH**
COURSE CODE: **MEE504 /ME405**
MAX. MARKS: **80**

PROGRAM: **MECHANICAL ENGINEERING**
COURSE NAME: **INDUSTRIAL ENGINEERING**
TIME: **3 HRS.**
DATE: **19/04/2017**

Instruction:-
1) Answer to two sections must be written in separate section answer book provided.
2) Figure to the right indicates marks.
3) Illustrate your answers with sketches wherever necessary.
4) Use of non-programmable pocket calculator is permissible.
5) Mathematical and other tables shall be made available on request.
6) Assume additional suitable data necessary.
7) Use of Mobile is strictly prohibited.

Section – I

Mark

Q.1 Attempt any **FOUR** **(08)**

a) What us the role of product design as one of the factor affecting productivity in manufacturing segment.

b) What do you understand by the term increasing productivity of resources?

c) Draw a neat labeled sketch for chain hoist.

d) Enlist any four objectives of good plant layout.

e) What information is required to do process planning?

f) What is the purpose of operation sheet?

Q.2 Attempt any **FOUR** **(16)**

a) What are the different component of productivity measurement system?

b) Explain in brief the concept of group technology or cellular manufacturing.

c) What are the different principles of materials handling?

d) Draw operation & route sheet. What if summarizes?

e) What are different factors affecting scheduling?

f) What are different types of Gantt chart? Explain any one type in detail.

Q.3 Attempt any **FOUR** **(16)**

a) Compare between process layout & product layout on the basis of i) flexibility ii) no.of machines needed iii) Product quality & iv) material handling.

b) Describe various factors affecting selection of material handling equipment.

c) What are different steps involved in process planning?

d) Define the terms i) plant capacity & ii) Machine capacity.

e) Explain various procedural steps in routing.

f) What are the advantages & applications of line of balancing technique? Mention five stages in line of balancing technique.

Marks

Section – II

Q.4 Attempt any **FOUR** **(08)**

a) Define method study.

b) What do you mean by critical examination?

c) List '4' time study equipment.

d) What is economic batch quantity?

e) Define Jigs and Fixtures.

f) Enlist any four components of Jig and fixtures.

Q.5 Attempt any **FOUR** **(16)**

a) Write down objectivities of work study.

b) Explain multiple activity chart with example.

c) What is concept of merit rating?

d) Explain string Diagram with example.

e) Draw a graph showing Inventory-cost relationship. Explain the terms used in it.

f) What are different storage system? Explain any one in detail.

Q.6 Attempt any **FOUR** **(16)**

a) State the function of locator & clamping devices in Jig/Fixtures. Draw a labeled sketch for each one.

b) Explain principle of six point location used in Jig Fixtures.

c) What is concept of continuous improvement.

d) Explain the concept of single piece production system.

e) Explain in brief F.M.S

f) Explain the concept of Rapid prototyping.

****

GOVERNMENT POLYTECHNIC, KOLHAPUR 416004.

(An Autonomous Institute of Govt. of Maharashtra)

EVEN TERM END EXAM APRIL/MAY-2017

EXAM SEAT NO. | | | | | | |

LEVEL: **THIRD.** PROGRAM: **MECHANICAL ENGINEERING.**

COURSE CODE: **MEE302/ME202.** COURSE NAME: **THERMAL ENGINEERING.**

MAX. MARKS: TIME: **3 HRS.** DATE: **19/04/2017.**

Instruction:-

1) Answers must be written in the main answer book provided. (and supplements if required)
2) Figure to the right indicates marks.
3) Illustrate your answers with sketches wherever necessary.
4) Use of non-programmable pocket calculator is permissible.
5) Mathematical and other tables shall be made available on request.
6) Assume additional suitable data necessary.
7) Use of Mobile is strictly prohibited.

Marks

Q.1 Attempt any **FOUR** **(08)**

a) Define extensive property. Give two examples.

b) Define system, list its different types.

c) State two clausius statement of Thermodynamics.

d) Define C.O.P. & state its unit.

e) State Charles Law.

f) State Stefen Boltzmann Law.

Q.2 Attempt any **FOUR** **(16)**

a) What are the limitation of 1st law of Thermodynamics.

b) Explain the application of second law of thermodynamics to Heat engine and refrigerator.

c) Differentiate between heat and work

d) Define point function and path function.

e) A fluid expands from initial condition of pressure 5 bar & volume 0.05m^3. to final volume 0.15 m^3. It is carried out at constant temperature

Calculate 1) Final pressure.

2) Work done.

f) Give classification of heat exchangers.

Q.3 Attempt any **FOUR** **(16)**

a) Write steady flow energy equation & apply it to boiler & nozzle.

b) State Law of Conservation of energy & Define K.E. & P.E.

c) Represent Iso baric process on P-V & T-S diagram.

d) Why CP is always greater than CV?

e) Explain the concept of black body?

f) Explain the terms enthalpy and entropy.

Q.4 Attempt any **FOUR** **(08)**

a) Define dryness fraction.

b) List any four boiler mountings.

c) What is boiler draught?

d) Write the function of nozzle?

e) State the Daltons Law of partial pressure.

f) What is need of cooling tower?

Q.5 Attempt any **FOUR** **(16)**

a) Define 1) Wet steam 2) Dry saturated steam
3)Superheated steam 4) Critical point

b) Steam at 10 bar pressure having mass 0.5 kg and dryness fraction 0.8 is heated at constant pressure until its volume is doubled. Calculate the final condition of steam and the work done. From steam table, at 10 bar pressure, Tsat=179.9 ^{0}C ,V_g=0.1943 m^3/kg

c) State the functions of
1) Economiser 2) Pressure Gauge
2) Fusible Plug 4) Superheater

d) Draw a neat sketch of 'Babcock and Wilcox' boiler. Show the position of mountings and accessories, path of flue gases.

e) Describe the method of reheat of steam to improve turbine efficiency.

f) Write two sources of air leakage into the condenser and its two effects on the performance of condenser.

Q.6 Attempt any **TWO** **(16)**

a) Explain the steam generation process with the help of T-H diagram.

b) Why compounding of steam turbine is necessary?

c) 1) Draw a neat sketch of Volex boiler and name various components.
2) What type of condenser will you employ if the condensate is to be directly fed to the boiler? Give reasons.

****

GOVERNMENT POLYTECHNIC, KOLHAPUR 416004.

(An Autonomous Institute of Govt. of Maharashtra)

EVEN TERM END EXAM APRIL/MAY -2017

EXAM SEAT NO. | | | | | | |

LEVEL: **FIRST** PROGRAM: **MECHANICAL ENGINEERING**

COURSE CODE: **MEE101** COURSE NAME: **FUNDAMENTAL OF MECHANICAL ENGINEERING**

MAX. MARKS: **80** TIME: **3 HRS.** DATE: **20/04/2017**

Instruction:-

1) Answers must be written in the main answer book provided. (and supplements if required)
2) Figure to the right indicates marks.
3) Illustrate your answers with sketches wherever necessary.
4) Use of non-programmable pocket calculator is permissible.
5) Mathematical and other tables shall be made available on request.
6) Assume additional suitable data necessary.
7) Use of Mobile is strictly prohibited.

Marks

Q.1 Attempt any **FOUR** **(08)**

a) Define 'system' and give its classification with example.

b) Define enthalpy and state its unit.

c) Give the list of different parts used in I.C. engine.

d) Write location of piston and crankshaft in I.C. engine.

e) Give the unit of refrigeration.

f) What is the role played by evaporator in a refrigeration system?

Q.2 Attempt any **FOUR** **(16)**

a) Differentiate between heat and work.

b) Explain thermal equilibrium and state zeroth law of thermodynamics.

c) With the help of neat sketches explain the working of four stroke engine.

d) Compare a petrol and diesel engine.

e) Describe with neat diagram vapour absorption refrigeration system.

f) Gives properties and important Name of various refrigerant.

Q.3 Attempt any **FOUR** **(16)**

a) Write various statements of the first law of thermodynamics.

b) Explain different types of thermodynamic systems.

c) Describe with neat diagram winter air conditioning system.

d) Compare two stroke cycle engine and four stroke cycle engine.

e) Give the function of following I.C engine parts

i) Cam shaft

ii) Connecting rod

iii) Flywheel

iv) Sparkplug

P.T.O.

f) Give various I.C engine systems and explain cooling system.

Q.4 Attempt any **FOUR** **(08)**

a) List out renewable and non renewable sources of energy.

b) State advantages & disadvantages of tidal energy.

c) Classify belt and state its material.

d) State types of couplings and state their application.

e) What is pump?

f) Classify turbines.

Q.5 Attempt any **FOUR** **(16)**

a) What is geothermal energy source? How it can be brought into use?

b) Explain working of Bio-gas plant with neat sketch.

c) Explain working of thermal power plant with neat sketch.

d) Compare belt drive with chain drive.

e) Explain working and construction of reciprocating air compressor with neat sketch.

f) Explain working and construction of centrifugal pump with neat sketch.

Q.6 Attempt any **FOUR** **(16)**

a) What do you understand by bio-diesel? How it is useful in future?

b) Explain flat plate collector with neat sketch.

c) Write applications, advantages and limitations of rope drive.

d) Explain working of Reciprocating pump with neat sketch.

e) Explain working of pelton turbine with neat sketch.

f) Sketch and explain working of Axial compressor.

****

GOVERNMENT POLYTECHNIC, KOLHAPUR – 416004.

(An Autonomous Institute of Govt. Of Maharashtra)

EVEN TERM END EXAM April/ May 2017

EXAM SEAT NO. | | | | | | |

LEVEL : - **SECOND** PROGRAM : **COMMON**

COURSE CODE :- **CCF/CCE202/X106**

COURSE NAME :- **COMMUNICATION SKILLS**

MAX. MARKS : **40** TIME : **2HRS.** DATE: - **20 / 04 / 2017**

Instruction:-

1) Answers must be written in the main answer book provided.(and supplements if required)
2) Figure to the right indicate marks.
3) Illustrate your answers with sketches wherever necessary.
4) Use of non-programmable pocket calculator is permissible.
5) Mathematical and other tables shall be made available on request.
6) Assume additional suitable data necessary.
7) Use of Mobile is strictly prohibited.

Marks

Q.1 Attempt any **FOUR** **(Answer the following questions in 3-5 sentences).** (08)

a) Write importance of oral communication for engineers.

b) Write four examples of oral communication.

c) State the advantages of written communication.

d) Define the term artefacts.

e) Write two advantages of LCD projector.

f) Explain panel interview.

Q.2 Attempt any **FOUR** (16)

a) Explain communication process with suitable diagram.

b) Explain mechanical and physical barriers.

c) Write strengths of media aided presentation.

d) Explain 'Media plays an important role in the communication processes'.

e) Write four advantages and disadvantages of oral communication.

f) Write short note on mock interview.

Q.3 Attempt any **TWO** (16)

a) Write any four principles of effective communication.

b) Write an application for the post of Design Engineer in Tata Motors, Pune. Give your resume.

P.T.O

c) Prepare a pie-chart which shows the distribution of sales of the car industry among six car companies :

General Motors	: 37%
Maruti	: 22%
Ford	: 04%
Tata	: 12%
Hyundai	: 13%
Fiat	: 12%

****

GOVERNMENT POLYTECHNIC, KOLHAPUR – 416004.

(An Autonomous Institute of Govt. Of Maharashtra)

EVEN TERM END EXAM April/ May 2017

EXAM SEAT NO. | | | | | | |

LEVEL : - **FOURTH** PROGRAM : **MECHANICAL ENGG.**

COURSE CODE :- **MEE407/ME307**

COURSE NAME :- **METROLOGY**

MAX. MARKS : **80** TIME : **3 HRS.** DATE :- **20/ 04 / 2017**

Instruction :-

1) Answer to two sections must be written in separate section answer book provided.
2) Figure to the right indicate marks.
3) Illustrate your answers with sketches wherever necessary.
4) Use of non-programmable pocket calculator is permissible.
5) Mathematical and other tables shall be made available o request.
6) Assume additional suitable data necessary.
7) Use of Mobile is strictly prohibited.

Section – I

Marks

Q.1 Attempt any **FOUR** (08)

a) Define error. List different types of errors arise during measurement.

b) Give two examples of line and end standard each.

c) Draw a sketch of 'sine bar'.

d) Define i) Basic Hole ii) Basic Shaft.

e) Write advantages of Pneumatic comparator.

f) State the precautions in using measuring instruments.

Q.2 Attempt any **FOUR** (16)

a) Define accuracy and precision.

b) Draw a neat sketch of sigma comparator and explain its working.

c) Write any four advantages of wavelength standard.

d) Explain the process of wringing of slip gauges with sketch.

e) Explain Taylor's principle of gauge design.

f) What is Clinometer? Explain its working with neat sketch.

Q.3 Attempt any **FOUR** (16)

a) Define systematic errors. State the causes of these errors.

b) Define the term 'Inspection'. Explain its need in industry.

c) State essential characteristics of a good comparator.

d) Compare Hole Basis system with shaft Basis system of fits.

e) What is tolerance? Explain two types of tolerances with example.

f) List various types of angle measuring Instruments. Explain how sine bar is used for angle measurement?

PTO

Section – II	Marks

Q.4 Attempt any **FOUR** (08)

a) What is progressive pitch error?

b) What is composite error in a gear?

c) Define i) Module ii) circular pitch.

d) Define i) Roughness ii) Waviness.

e) State the following terms used in surface finish measurement

i) Lay ii) Sampling length.

f) Define i) Straightness ii) Squareness.

Q.5 Attempt any **FOUR** (16)

a) List various types of errors in screw thread. Explain any one type of error.

b) Describe construction and working of floating carriage dial micrometer.

c) Explain following errors in gears i) Backlash ii) Runout.

d) Explain ten point average method of measurement of surface finish.

e) Describe the setup to check true running of head stock centre of lathe machine.

f) Elaborate importance of calibration of measuring instruments.

Q.6 Attempt any **FOUR** (16)

a) Suggest the measuring instruments to measure the following features of an external and internal threads i) Major diameter ii) Effective diameter iii) Pitch iv) Thread Angle.

b) Describe with a neat sketch the 'Parkinson gear tester'.

c) Describe the constant cord method for measurement of gear tooth thickness.

d) How surface finish is represented on drawing?

e) In measurement of surface roughness height of successive 10 peaks and troughs are 33,25,30,19,22,27,29,20,18,32 microns. It is obtained for 10mm length. Find CLA and RMS values.

f) Write the calibration procedure for calibration of micrometer.

****

GOVERNMENT POLYTECHNIC, KOLHAPUR – 416004.

(An Autonomous Institute of Govt. Of Maharashtra)

EVEN TERM END EXAM April/ May 2017

EXAM SEAT NO. | | | | | | |

LEVEL : - **THIRD** PROGRAM : **MECHANICAL ENGINEERING**

COURSE CODE :- **MEE306/ME206/M206**

COURSE NAME :- **MACHINE TOOLS**

MAX. MARKS : **80** TIME : **3 HRS.** DATE: - **21 / 04 / 2017**

Instruction:-

1) Answers must be written in the main answer book provided.(and supplements if required)
2) Figure to the right indicate marks.
3) Illustrate your answers with sketches wherever necessary.
4) Use of non-programmable pocket calculator is permissible.
5) Mathematical and other tables shall be made available on request.
6) Assume additional suitable data necessary.
7) Use of Mobile is strictly prohibited.

Marks

Q.1 Attempt any **FOUR** (08)

a) Describe orthogonal cutting with neat sketch.

b) State the disadvantages of a built up edge.

c) Classify lathes on the basis of duty. Give the range of diameters that can be supported on each lathe.

d) Explain step turning operation performed on a lathe with a neat sketch.

e) Differentiate between drilling and boring. Write only two main points.

f) Show countersinking operation with a neat sketch. State its purpose.

Q.2 Attempt any **FOUR** (16)

a) State the ingredients of 18-4-1 cutting tool material. Write two properties connected with it.

b) Sketch a single point cutting tool and show various angles on it.

c) Describe the formation of chip with a neat sketch.

d) What are chip breakers? Sketch different types of chip breakers.

e) Describe the threading operation performed on a lathe?

f) List basic parts of lathe. State function of each part.

Q.3 Attempt any **FOUR** (16)

a) Define taper. Sketch a taper turning attachment.

b) Describe parting off operation with a neat sketch.

c) How do you specify a radial drilling machine?

d) How will you arrive to calculate machining time on a drilling machine?

e) Describe i) Tapping operation ii) Reaming operation with respect to a drilling machine.

f) Sketch a twist drill. Label it properly.

P.T.O.

Q.4 Attempt any **TWO** (08)

a) Explain tool & cutter grinder with neat sketch.

b) Explain lapping process used in super finishing process with neat sketch.

c) State the advantages and limitations of broaching machines.

Q.5 Attempt any **FOUR** (16)

a) Give detail classification of grinding machines.

b) Explain Quick Return Mechanism used in shaping machine with suitable sketch.

c) Draw the neat sketch of slotting machine and name the parts.

d) Explain various factors of selection of grinding wheel.

e) Draw the neat sketches of Grinding Wheel type and shapes. State their uses.

f) State any eight applications of super finishing processes.

Q.6 Attempt any **TWO** (16)

a) Describe the basic parts and their functions of standard shaper with neat sketch.

b) Explain in detail Grit, Grade and Structure of Grinding Wheel.

c) Explain Honing Process with neat sketch. State the advantages and limitations of Honing Process.

****

GOVERNMENT POLYTECHNIC, KOLHAPUR 416004.

(An Autonomous Institute of Govt. of Maharashtra)

EVEN TERM END EXAM APRIL/MAY -2017

EXAM SEAT NO. | | | | | | |

LEVEL:**FOURTH.** PROGRAM: **MECHANICAL ENGINEERING.**

COURSE CODE:**MEE401.** COURSE NAME: **POWER ENGINEERING.**

MAX. MARKS: **80** TIME: **3 HRS.** DATE: **21/04/2017**

Instruction:-

1) Answer to two sections must be written in separate section answer book provided.
2) Figure to the right indicates marks.
3) Illustrate your answers with sketches wherever necessary.
4) Use of non-programmable pocket calculator is permissible.
5) Mathematical and other tables shall be made available on request.
6) Assume additional suitable data necessary.
7) Use of Mobile is strictly prohibited.

Section – I

Marks

Q.1 Attempt any **FOUR** **(08)**

a) Define the terms – 1) swept volume 2)cut-off ratio.

b) State the function of catalytic converter.

c) Write any two advantages of turbo-charger.

d) Define the terms – 1) Volumetric Efficiency
2) BSFC (Brake Specific Fuel Consumption)

e) Write the equation to calculate the air-standard efficiency of an diesel cycle & state the meaning of each term in the equation.

f) List principles of Lubrication.

Q.2 Attempt any **FOUR** **(16)**

a) Derive on expression for the efficiency of an Otto cycle.

b) List the pollutions in exhaust gases of I.C. Engine & state their effects on environment.

c) An engine working on Otto cycle has swept volume 3.976×10^{-3} m^3& clearance volume 1.25×10^{-3} m^3, find air standard efficiency.

d) State the purpose of testing an I.C. Engine state the types of tests carried out on I.C. Engine.

e) Compare Two stroke Engine with Four stroke Engine on the basis of –
1) Completion of cycle 2) power produced by same size of Engine.
3) Cooling & lubrication requirements 4) volumetric efficiency.

f) Following observations were made while taking a trial on a single cylinder I.C. engine.
Brake power = 50kw
Mechanical Efficiency =85%
Brake thermal Efficiency =40%
Calorific volume = 42000 kJ/kg
Calculate – 1)Indicated power
2)Fuel consumption.

Q.3 Attempt any **TWO.** **(16)**

a) 1) Explain stages of combustion in S.I. Engine.
2) What is pre-ignition? Write effects of pre-ignition.

b) 1) Explain Morse Test to measure the indicated power of multi-cylender I.C. Engine.
2) Draw a neat sketch of Battery ignition system & label the parts.

P.T.O

c) During a trial on a four stroke single cylinder engine , following data were obtained.
Duration of trial- 30 minutes
Speed – 1800 rpm
Brake power – 3630.5 kJ/min
Heat supplied -13193.5 kJ/min
Mass of Jacket cooling water – 485 kg
Rise in temperature of cooling water - 60^0C
Mass of exhaust gas – 190.25 kg
Exhaust gas temperature - 476^0C
Specific heat of exhaust gas -1.25 kJ/kgK
Room temperature -19^0C
Calorific value of fuel – 42300 kJ/kgK
Specific heat of water – 4.18 kJ/kgK
Prepare the heat balance sheet on minute basis.

Section – II

Marks

Q.4 Attempt any **FOUR** **(08)**

a) Define the terms – 1) swept valume and 2) Free air delivered related to air compressor.
b) State any four uses of compressed air.
c) Classify the gas turbine according to fuel used and cycle of operation.
d) Give four applications of gas turbine.
e) State the principle of the working of an open gas turbine.
f) Define the term 'Regeneration' in gas turbine.

Q.5 Attempt any **FOUR** **(16)**

a) Explain working of single stage air compressor with neat sketch.
b) State the equation of work done for single acting, single stage reciprocating air compressor when compression is 1) Isothermal and 2) compression is according to law PV^n=constant with meaning of each term in the equation.
c) A single stage air compressor delivers air at 5 bar. The suction temperature and pressure are 20^0C and 1 bar respectively. Volume of air entering the compressor is $2m^3$/min. The index of compression is 1.2. Calculate isothermal efficiency of the compressor.
d) Explain effect of inter cooling on efficiency of air compressor with the help of p-v diagram.
e) Explain principle of working of turbojet with neat sketch.
f) Describe working principle of solid propellant rocket with line diagram.

Q.6 Attempt any TWO: **(16)**

a) Two stage compressor works between 1 bar to 10 bar pressure. Inlet temperature is 30^0C. Index of compression is 1.3. Neglect clearance. Assume perfect intercooling and Cp for air as 1.005 KJ/kg^0 K. Determine (i) Intermediate pressure (ii) Work done in compression (iii) Heat rejected in intercooler.
b) i) With neat sketch, describe the working of screw compressor
ii) Explain the reheating using T-s diagram in gas turbine.
c) i) Differentiate open cycle and closed cycle gas turbine (four point)
ii) Explain in brief, any two method of energy saving in air compressor.

****

GOVERNMENT POLYTECHNIC, KOLHAPUR 416004.

(An Autonomous Institute of Govt. of Maharashtra)

EVEN TERM END EXAM APRIL/MAY-2017

EXAM SEAT NO. | | | | | | |

LEVEL: **FIRST.** PROGRAM: **CE/ME/SM/MT.**

COURSE CODE:**CCF103/CCE103/X109/X103**

COURSE NAME: **CHEMISTRY OF ENGINEERING MATERIALS.**

MAX. MARKS: **80** TIME: **3 HRS.** DATE: **24/04/2017**

Instruction:-

1) Answers must be written in the main answer book provided. (and supplements if required)
2) Figure to the right indicates marks.
3) Illustrate your answers with sketches wherever necessary.
4) Use of non-programmable pocket calculator is permissible.
5) Mathematical and other tables shall be made available on request.
6) Assume additional suitable data if necessary.
7) Use of Mobile is strictly prohibited.

Q.1 Attempt any **FOUR** **Marks (08)**

a) Write fundamental particles of atom with respect to charge & mass.

b) Define atom. Why the structure of atom is neutral?

c) Define Conductor & Electrolyte.

d) Distinguish between metallic conduction & Electrolytic condition.(any two points).

e) Write impurities in water.

f) Write any two reactions of hard water with soap.

Q.2 Attempt any **FOUR** **(16)**

a) Write the formation of NaCl molecule. Which is the type of bond?

b) With diagram explain electrolysis of $CuSO_4$ solution by using Pt electrodes.

c) Which is the method used for coating irregularly shaped articles & explain it with diagram?

d) Write classification of corrosion. Which film is called as protective type & why?

e) Write disadvantages of hard water for textile industry & dying industry.

f) Explain with diagram ion exchange method to remove total hardness of water.

Q.3 Attempt any **FOUR** **(16)**

a) State & explain Hund's rule of maximum multiplicity.

b) Calculate the time in seconds in which 0.3gms of copper is deposited from $CuSo_4$ solution when a current of 0.5 amp is passed. The chemical equivalent (eq.wt.)of Cu being 31.6.

c) Write factors affecting atmospheric corrosion.

d) Distinguish between hard water & soft water.(any four points)

e) With chemical reactions explain sterilization of water by using bleaching powder.

f) What are the disadvantages of scale formation in boilers?

Q.4 Attempt any **FOUR** **(08)**

a) Define the terms 1) Mineral 2) Ore.

b) Write any four application of monel metal alloy.

c) Give any four function of lubricant.

d) Write with example classification of composite materials.

e) State two constituents of paint and give one function of each.

f) Give the characteristics of good insulator.

Q.5 Attempt any **FOUR** **(16)**

a) Write chemical reactions involved in the zone of reduction of blast furnace.

b) Distinguish between calcination and roasting.

c) Define alloy. Give the classification of alloy. State the purposes of making alloy

d) Explain with diagram gravity separation method.

e) Define oil paint . Write characteristics of good oil paint.

f) What is lubrication ? Explain the Fluid film lubrication with diagram.

Q.6 Attempt any **FOUR** **(16)**

a) Define lubricant. Suggest the suitable lubricant for

   i) Gears

   ii) Cutting tools

   iii) Concrete mixture machine

b) Give four points of difference between paint and varnish.

c) Define polymerization. Give the types of polymerization. State the characteristics of thermosoftening plastic.

d) Write any four uses of rubber based on it's different properties.

e) Define adhesive. Write characteristics of good adhesives.

f) How is thermocole prepared? Write the uses and properties of thermocole.

****

GOVERNMENT POLYTECHNIC, KOLHAPUR – 416004.

(An Autonomous Institute of Govt. Of Maharashtra)

EVEN TERM END EXAM April/ May 2017

EXAM SEAT NO. | | | | | | |

LEVEL : - **FIFTH** PROGRAM : **MECHANICAL ENGINEERING**

COURSE CODE :- **MEE502/ME403**

COURSE NAME :- **INDUSTRIAL ORGANIZATION & MANAGEMENT**

MAX. MARKS : **80** TIME : **3 HRS.** DATE :- **24 / 04 / 2017**

Instruction :-

1) Answer to two sections must be written in separate section answer book provided.
2) Figure to the right indicate marks.
3) Illustrate your answers with sketches wherever necessary.
4) Use of non-programmable pocket calculator is permissible.
5) Mathematical and other tables shall be made available o request.
6) Assume additional suitable data necessary.
7) Use of Mobile is strictly prohibited.

Section – I

Marks

Q.1 Attempt any **FOUR** (08)

a) State any four principles of management.

b) Define business.

c) List down different business sectors in India.

d) State different functions of management.

e) Define motivation and state its importance.

f) State different methods of training.

Q.2 Attempt any **FOUR** (16)

a) Explain different levels of management.

b) Describe concept of management with its importance.

c) Describe any two functions of management.

d) Differentiate between management and administration.

e) List principles of organization and explain any two.

f) Explain with a neat sketch 'Line Organization'.

Q.3 Attempt any **FOUR** (16)

a) Explain importance of proper planning in management.

b) State and explain principles of good human resource planning.

c) Describe causes of accidents.

d) Write a note on 'Staffing' in management.

e) Describe functions of safety management.

f) Explain importance of organizing in management.

P.T.O.

Section – II	Marks

Q.4 Attempt any **FOUR** (08)

a) Give four objectives of materials management.

b) Why financial management is important for any business?

c) Enlist four financial institutes giving finance to industries.

d) Enlist various provisions in ESI act.

e) What are safety codes? Why they are required?

f) Define activity and event with respect to networks analysis.

Q.5 Attempt any **TWO** (16)

a) Explain the concept of supply chain management.

b) Describe various methods of purchasing and steps in purchasing procedure.

c) What is capitalization? Discuss the effects of over and under capitalization.

Q.6 Attempt any **TWO** (16)

a) Why accident investigation is carried out? How it is done? What information is required to report an accident?

b) i) Differentiate clearly between PERT & CPM.

ii) Describe the various time estimates in network analysis.

c) Attempt any TWO

i) Explain lean manufacturing.

ii) How workers participation in management is possible? What are its effects?

iii) Explain – MRP.

****

GOVERNMENT POLYTECHNIC, KOLHAPUR – 416004.

(An Autonomous Institute of Govt. Of Maharashtra)

EVEN TERM END EXAM April/ May 2017

EXAM SEAT NO. | | | | | | |

LEVEL : - **THIRD** PROGRAM : **MECHANICAL /SUGAR MANUFACTURING**
COURSE CODE :- **MEE309/ME209/SM207**
COURSE NAME :- **ELECTRICAL TECHNOLOGY**
MAX. MARKS : **80** TIME : **3 HRS.** DATE: - **05 / 05 / 2017**

Instruction:-

1) Answers must be written in the main answer book provided.(and supplements if required)
2) Figure to the right indicate marks.
3) Illustrate your answers with sketches wherever necessary.
4) Use of non-programmable pocket calculator is permissible.
5) Mathematical and other tables shall be made available on request.
6) Assume additional suitable data necessary.
7) Use of Mobile is strictly prohibited.

Marks

Q.1 Attempt any **FOUR** (08)

a) Define Electric potential and state its unit.

b) State i) Kirchoff's current law. ii) Kirchoff's voltage law.

c) Define balanced and unbalanced load.

d) State any two uses of digital energy meter.

e) Define the terms i) Frequency ii) Time-period.

f) Find the relation between line and phase value of voltage in case of star connected load.

Q.2 Attempt any **FOUR** (16)

a) Write difference between each of following.
Primary and Secondary measuring instrument.

b) Define and state the SI units of electric power and electrical energy.

c) A 230V, 100W incandescent lamp is connected across single phase 230V AC supply. Calculate i) The current drawn by the lamp ii) Resistance of the lamp.
iii) How many units of electrical energy does the lamp of 100watt consume when it is kept on for 10 hours?

d) State any four advantages of polyphase circuits over single phase circuit.

e) State and explain laws of electromagnetic induction.

f) Define Earthing and explain any one method of earthing in detail.

Q.3 Attempt any **FOUR** (16)

a) Draw a balanced delta connected load (resistive). State the relation between the line and phase value of voltages and currents in it.

b) With neat sketch, explain the construction and working of Megger in detail.

c) Derive the expression for the equivalent resistance if the resistances are connected in series.

P.T.O.

d) Describe the working of a purely inductive circuit on an a.c. supply.

e) Draw a series RC circuit connected to an a.c. source and draw vector diagram and label the current and voltages in it.

f) Define Reactance, impedance with their units. Also draw impedance triangle.

Q.4 Attempt any **FOUR** (08)

a) State emf equations for single phase transformer.

b) What is meant by ideal and practical single phase transformer?

c) State principle of dielectric heating process.

d) State applications of DC motors (any four)

e) Give at least four applications of stepper motor.

f) State the methods to change the direction of rotation of 3-phase induction motor.

Q.5 Attempt any **FOUR** (16)

a) Draw no load current characteristic for practical transformer and explain no load losses.

b) 2 KVA, 230V / 115V single phase transformer has iron losses 50 Watt and 350W copper losses at full load condition. Calculate the % efficiency and % regulation if the secondary voltage at full load is 110volt and the power factor is 0.8 lagging.

c) Draw labelled diagram of dielectric furnace unit and state four applications.

d) State and elaborate requirements for the good illumination scheme for typical area (any one)

e) Draw and explain in short by equations the speed-torque characteristics of DC shunt and DC series motor.

f) State the need for starter in 3-phase squirrel cage induction motor and explain with neat sketch any one such starter.

Q.6 Attempt any **FOUR** (16)

a) Sketch constructional features of any one type of 1 phase transformer. State two advantages and disadvantages of the same.

b) State types of heating processes, sketch any one the constructional diagram. Explain its working and advantages, disadvantages.

c) State the applications as per the types of electric furnaces each at least two.

d) Explain with neat sketch principle of working of servo motor and its applications.

e) Explain the significance of rotating magnetic field in 3-phase induction motor. What is meant by slip speed?

f) Give the important function of star-Delta starter for 3-phase induction motor. Draw the circuit diagram and comment on the star-delta starter types.

****

GOVERNMENT POLYTECHNIC, KOLHAPUR 416004.

(An Autonomous Institute of Govt. of Maharashtra)

EVEN TERM END EXAM APRIL/MAY -2017

EXAM SEAT NO. | | | | | | |

LEVEL: **FIFTH** PROGRAM: **MECHANICAL ENGINEERING**

COURSE CODE: **MEE510/ME411**

COURSE NAME: **INDUSTRIAL HYDRAULICS & PNEUMATICS**

MAX. MARKS: **80** TIME: **3 HRS.** DATE: **02 /05/2017**

Instruction:-

1) Answer to two sections must be written in separate section answer book provided.
2) Figure to the right indicates marks.
3) Illustrate your answers with sketches wherever necessary.
4) Use of non-programmable pocket calculator is permissible.
5) Mathematical and other tables shall be made available on request.
6) Assume additional suitable data necessary.
7) Use of Mobile is strictly prohibited.

Section – I

Marks

Q.1 Attempt any **FOUR** **(08)**

a) Define mass density of oil. State its unit.

b) Draw the symbol of uni-directional pump.

c) Draw a figure of construction of single acting cylinder & label it.

d) What are actuators? How they are classified.

e) What are accumulators? How they are classified

f) Differentiate between static seal & dynamic seal.

Q.2 Attempt any **FOUR** **(16)**

a) Draw the symbols for

i) Sequence valve

ii) Counter balance valve

b) What is hose? Enlist factors affecting selection of hose in hydraulic system.

c) Explain with neat sketch synchronization circuit.

d) What are the criteria for selection of pump?

e) Explain axial piston pump with neat sketch.

f) What is tandem cylinder? Explain with neat sketch. Draw symbol of it.

Q.3 Attempt any **TWO** **(16)**

a) Explain with neat sketch the working of hydraulic circuit for milling machine.

b) State the function of pressure relief valve for hydraulic system. Explain its working with neat sketch.

c) Explain in brief various components of hydraulic system. Also write merits & demerits of hydraulic system.

Section – II

Marks

Q.4 Attempt any **FOUR** **(08)**

a) Draw symbol of time delay valve.

b) List any four applications of pneumatic system.

c) How is a pneumatic cylinder specified?

d) What are the functions of seals in pneumatic system?

e) State any four limitations of pneumatic system.

f) Enlist any four pipe materials used in pneumatic system.

Q.5 Attempt any **FOUR** **(16)**

a) Compare Hydraulic & pneumatic system.

b) Explain various valve actuating mechanism.

c) Draw neat sketch of quick exhaust valve.

d) Draw a simple circuit showing application of shuttle valve.

e) Draw a pneumatic circuit to operate a double acting cylinder.

f) Draw a neat sketch of air lubricator.

Q.6 Attempt any **FOUR** **(16)**

a) Draw neat sketch of air pressure regulator.

b) Draw neat sketch of time delay valve.

c) Draw neat sketch of vane air motor.

d) Draw and explain speed control circuit to operate double acting cylinder.

e) Draw labelled sketch of Air cylinder.

f) Draw pneumatic circuit to operate single acting cylinder using twin pressure valve.

****

GOVERNMENT POLYTECHNIC, KOLHAPUR 416004.

(An Autonomous Institute of Govt. of Maharashtra)

EVEN TERM END EXAM APRIL/MAY -2017

EXAM SEAT NO. | | | | | | |

LEVEL: **FIRST** PROGRAM: **COMMON**

COURSE CODE: **CCF110/CCE110/X111/R112** COURSE NAME: **APPLIED MECHANICS**

MAX. MARKS: **80** TIME: **3 HRS.** DATE: **02/05/2017**

Instruction:-

1) Answers must be written in the main answer book provided. (and supplements if required)
2) Figure to the right indicates marks.
3) Illustrate your answers with sketches wherever necessary.
4) Use of non-programmable pocket calculator is permissible.
5) Mathematical and other tables shall be made available on request.
6) Assume additional suitable data necessary.
7) Use of Mobile is strictly prohibited.

Q.1 Attempt any **FOUR** **Marks (08)**

a) Define concurrent force system with any one of field example.

b) State polygon law of forces.

c) Explain funicular polygon with its use.

d) State any two laws of friction.

e) Explain the relationship between angle of friction & angle of Repose.

f) Draw free body diagram of body resting on rough inclined surface.

Q.2 Attempt any **FOUR** **(16)**

a) Resolve the 200N force along 30^0 & 20^0 on either side with neat sketch.

b) Find resultant in magnitude & direction of forces 1kN, 2kN, 3kN, 4kN, 5kN and 6kN acting from center of hexagon towards its angular points respectively. (solve by analytical method)

c) Solve Q.No.2 (b) by graphical method.

d) An electric bulb of 5N weight is hanging from ceiling. Its wire is pulled by a force acting horizontally such that the wire makes an angle of 60^0 with ceiling. Find the magnitude of pulled force & tension in the wire.

e) Find the support reaction of beam ABCD supported at 'A' & 'C' & portion CD is overhang. The given span is AB=BC=2m & CD=1.5m. The UDL of 20kN/m is acting on 'B' to 'D' with downward point load of 50kN acting at point D free end.

f) The body of weight 100N will begin to slide when horizontal plane is raised gradually upto 22^0. What is horizontals force required to drag the same body.

Q.3 Attempt any **FOUR** **(16)**

a) The forces 50N, 30N, 20N & 15N are acting on four sides of 10cm square box respectively on clockwise direction. Find resultant from force & locate from 50N side.

b) Three forces are acting along three side of an equilateral triangle of side 2m with forces 15N, 20N & 10N respectively. Find resultant from force of side 10N.

c) A solid sphere of radius 10cm weighing 1.2KN is hung with steel cable 50cm from vertical smooth wall to its center. Find the contact force between wall & solid sphere & tension in cable.

d) Beam AB of span 6m is hinged at A & roller support at B carrying vertically downward point load of 12kN at 2m from support A & inclined point load of 10kN inclined at 30^0 anticlockwise from horizontal at 4m from support A, Also udl of 5kN/m is acting over entire span. Calculate support reaction by analytical method.

e) Solve Q.No.3 (d) by graphical method.

f) A ladder of 3.5m with weight 150N is rested on smooth vertical wall & rough horizontal surface with 18^0 inclination to horizontal. What is force (pull) required at horizontal contact surface to keep ladder in equilibrium when man weighing 750N stands on its mid length. Take coefficient of friction between rough horizontal surface is 0.25.

Q.4 Attempt any **FOUR** **(08)**

a) Define Rectilinear motion.

b) Differentiate displacement & distance.

c) Define angular velocity.

d) Define energy.

e) Define work done by torque.

f) State law of machine with meaning of each notation.

Q.5 Attempt any **FOUR** **(16)**

a) A composite section as shown in figure in which a equilateral triangle is rested on a square. Determine centroidal position of the section from reference axes X& Y

b) A circular disc of 500mm diameter is cut off from a sheet of radius 500mm find the centroid of the remainder portion from reference axes X&Y as shown in figure.

c) A car staring from rest & increases speed from 0 to 10m/s with constant acceleration 0.5 m/sec^2 runs at this speed for a time of 30 seconds & finally comes to rest, with deceleration of 0.3m/sec^2. Find the total distance travelled by car.

d) A wheel moves from 200rpm to 150 rpm in 10 seconds find the retardation & time required to come to stop.

e) A bullet weighing 1N is fired with velocity 400m/sec. into a wooden block weighing 100N. If the bullet remains embedded in the block, calculate the velocity of the block after impact.

f) In a simple lifting machine 100N is lifted by an effort of 8N at an efficiency 62.5%. Find the effort lost in friction & the load lost in friction.

Q.6 Attempt any **FOUR** **(16)**

a) Determine center of gravity of a solid composite body as shown in figure from the base of body.

b) A stone is dropped into well. Its sound is heard after 3 seconds. The velocity of sound is 320 m/sec. find the depth of well.

c) A wheel starts from the rest & accelerates at 15 red/sec^2 until it reaches a speed of 300 rpm. With this speed it rotates for 3 minutes & then retards uniformly for 150 seconds & stops. Find total number of revaluations made.

d) In a simple lifting machine the effort required to lift a certain load is 150N. When efficiency is 65%. Find ideal effort of machine.

e) A simple lifting machine lifts a load of 400N & 600N by efforts of 60N & 80N respectively. Find law of machine & efficiency at a load of 800N if velocity ratio of machine is 22.

f) 300 cubic meters of water is to be raised to a tank of height 10 meters in 10 minutes. Calculate the power of the pump required in kilowatt.

****

Q.5)
a)

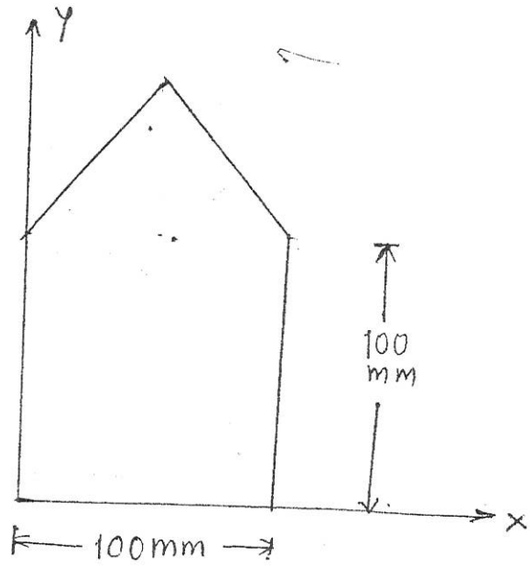

Q.5)
b)

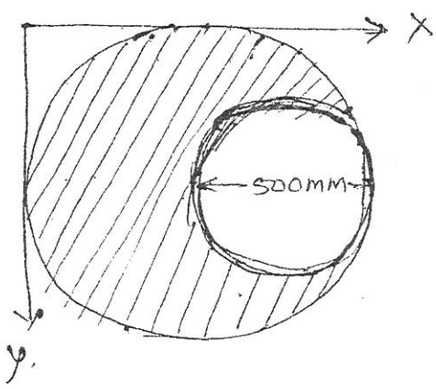

Q.6) a.)

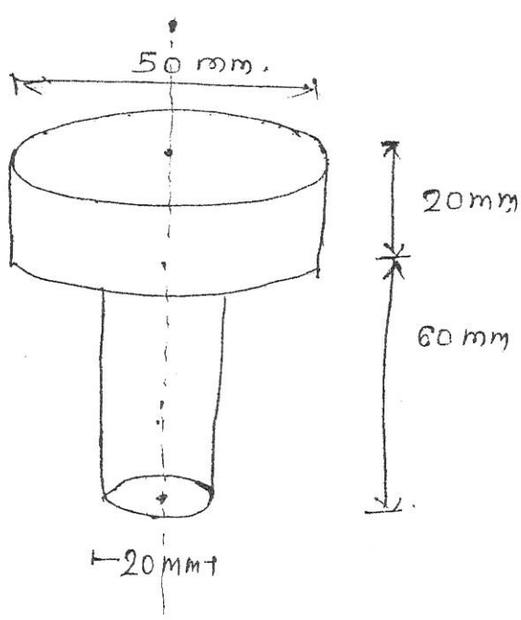

GOVERNMENT POLYTECHNIC, KOLHAPUR 416004.

(An Autonomous Institute of Govt. of Maharashtra)

EVEN TERM END EXAM APRIL/MAY -2017

EXAM SEAT NO. | | | | | | |

LEVEL: **THIRD** PROGRAM: **MECHANICAL ENGINEERING**

COURSE CODE: **MEE308/ME208** COURSE NAME: **THEORY OF MACHINES & MECHANISM**

MAX. MARKS: **80** TIME: **3 HRS.** DATE: **03/05/2017**

Instruction:-

1) Answers must be written in the main answer book provided. (and supplements if required)
2) Figure to the right indicates marks.
3) Illustrate your answers with sketches wherever necessary.
4) Use of non-programmable pocket calculator is permissible.
5) Mathematical and other tables shall be made available on request.
6) Assume additional suitable data necessary.
7) Use of Mobile is strictly prohibited.

Marks

Q.1 Attempt any **FOUR** **(08)**

a) Define kinematic pair and kinematic chain.

b) Define constrained motion and state its types.

c) List inversions of four bar chain

d) Define 1) linear velocity 2) lower pair.

e) State the types of cams.

f) List the different types of follower motion.

Q.2 Attempt any **FOUR** **(16)**

a) Distinguish between mechanism and structure.

b) List inversions of single slider crank chain and explain any one with neat sketch.

c) Draw and explain working of scotch yoke mechanism.

d) Explain with neat sketch construction of acceleration diagram for single slider crank mechanism by Kliens construction.

e) Explain Grass Hopper mechanism with neat sketch.

f) Explain pantograph with neat sketch.

Q.3 Attempt any **TWO** **(16)**

a) In a four bar chain mechanism ABCD, AD is fixed and is 150mm long. The crank AB is 40mm long and rotates at 120rpm clockwise, while the link CD, 80mm oscillates about D. BC and AD are of equal length. Find the angular velocity of line CD when $\angle BAD=60^0$.

b) In a slider crank mechanism crank is 30mm long and length of connecting rod is 120mm. The crank makes an angle of 30^0 with IDC and rotates with uniform speed of 200 rpm clockwise. Determine graphically.

   i) Angular acceleration of connection rod.

   ii) Acceleration of slider.

c) Draw the profile of cam operating a roller follower and with following data. Minimum radius of cam 25mm, Lift of follower 30mm, Roller diameter 15mm.

The cam lifts the follower for 120^0 with SHM followed by a dwell period of 30^0. Them the follower lowers down during 150^0 of the cam rotation with uniform acceleration and deceleration followed by a dwell period. The axis of follower and cam are co-axial.

Q.4 Attempt any **FOUR** **(08)**

a) Define slip and creep in case of belt drive.

b) Which of the assumptions are used for clutches under new and old condition? Give reason.

c) Define terms i) Module ii) Circular pitch.

d) Write advantages of gear drive over belt drive

e) What is the functions of governor.

f) Define i) Height of Governor ii) Sleeve lift

Q.5 Attempt any **FOUR** **(16)**

a) A pulley is driven by flat belt, the angle of lap being 120^0. The belt is 100mm wide by 6mm thick and density $1000kg/m^3$. If the coefficient of friction is 0.3 and maximum stress in the belt is 2MPa. Find the maximum power which the belt can transmit and corresponding speed of the belt.

b) For flat belt prove that $T_1/T_2 = e^{\mu\theta}$

c) A multiplate disc clutch has fire plates having four pairs of active friction surface. If the intensity of pressure is not to exceed 0.127 N/mm^2 find the power transmitted at 500rpm. The outer and inner radii of friction surface are 125mm and 75mm respectively. Assume uniform wear & tear μ=0.3

d) Differentiate between cycloidal and involutes profile teeth.

e) Explain with neat sketch Wilson-Hartnell Governor.

f) Fig shows compound gear train in which wheel A is fixed to the driving shaft B-C are compounded. D is idle and E is fixed on the driven shaft. If gear A is rotated at 1800 rpm. Find the speed and direction of E. take t_A=15, t_B=15, t_C=30, t_D=15 & t_E=40

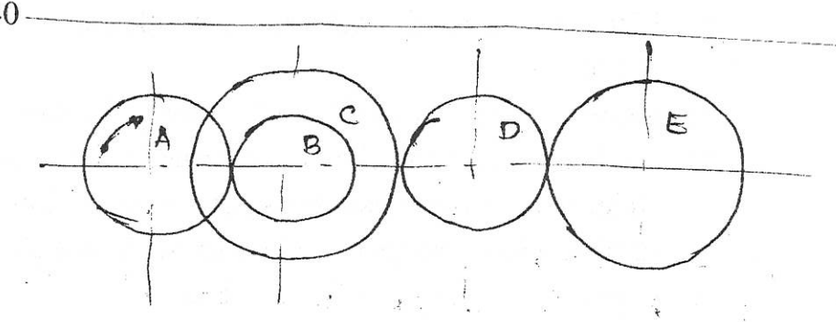

Q.6 Attempt any **TWO** **(16)**

a) Determine the width of a 10mm thick leather belt required to transmit 15kW from motor running at 900r.p.m. The diameter of driving pulley of the motor is 300mm. The driven pulley runs at 300rpm and the distance between the centre of two pulleys is 3 meter. The density of the leather is $1000kg/m^3$. The maximum allowable stress in the leather is 2.5MPa. The coefficient of friction between the leather and pulley is 0.3. Assume open belt drive and neglect slip of the belt.

b) i) Describe with neat ketch centrifugal clutch.

ii) A single plate clutch with both sides effective has a outer and inner diameter 300mm and 200mm respectively. The maximum intensity of pressure at any point in the contract surface is nit to exceed 0.1 N/mm^2. If the coefficient of friction is 0.3 determine the power transmitted by a clutch by a clutch at a speed 2500rpm.

c) i) State different types of gear trains and explain any one of them with neat sketch.

ii) Explain with neat sketch centrifugal Governor.

****

GOVERNMENT POLYTECHNIC, KOLHAPUR 416004.

(An Autonomous Institute of Govt. of Maharashtra)

EVEN TERM END EXAM APRIL/MAY -2017

EXAM SEAT NO. | | | | | | |

LEVEL: **FIRST** PROGRAM: **COMMON**

COURSE CODE: **CCF105/CCE105/X104/R107/107** COURSE NAME: **BASIC MATHEMATICS**

MAX. MARKS: **80** TIME: **3 HRS.** DATE: **09/05/2017**

Instruction:-

1) Answers must be written in the main answer book provided. (and supplements if required)
2) Figure to the right indicates marks.
3) Illustrate your answers with sketches wherever necessary.
4) Use of non-programmable pocket calculator is permissible.
5) Mathematical and other tables shall be made available on request.
6) Assume additional suitable data necessary.
7) Use of Mobile is strictly prohibited.

Q.1 Attempt any **FOUR** **Marks (08)**

a) Resolve into partial fraction $\frac{1}{x^2 - x}$

b) If $A = \begin{bmatrix} 2 & -1 & 1 \\ 3 & -4 & 0 \end{bmatrix}$ & $B = \begin{bmatrix} 0 & 2 \\ -3 & 1 \\ 4 & -1 \end{bmatrix}$ is the matrix AB is non singular.

c) Evaluate i) 7_{P_3} ii) 4_{C_3}

d) Solve the equations by matrix method

$3x + y = 1$

$5x + 2y = 3$

e) Expand the following binomial upto 4th term of the expansion $(1+2x)^{1/2}$

f) Expand $(x+y)^5$ by using binomial theorem.

Q.2 Attempt any **FOUR** **(16)**

a) Find k if $\begin{vmatrix} 2-k & 7 \\ 3 & -4 & 13 \\ 8 & -11 & 33 \end{vmatrix} = 0$

b) Resolve into partial fraction $\frac{x^3 + x}{x - 9}$

c) If $A = \begin{bmatrix} 2 & 4 & 4 \\ 4 & 2 & 4 \\ 4 & 4 & 2 \end{bmatrix}$ show that A^2-8A is a scaler matrix.

d) Resolve into partial fraction $\frac{x^2 + x + 1}{(x-1)^3}$

e) If $A = \begin{bmatrix} 2 & -3 \\ 3 & 4 \end{bmatrix}$, $B = \begin{bmatrix} 4 & 5 \\ 3 & -2 \end{bmatrix}$, $c = \begin{bmatrix} 3 & -1 \\ 0 & 6 \end{bmatrix}$ Find 3A+4B-2C

f) Find x and y if $\left\{4\begin{bmatrix} 1 & 2 & 0 \\ 2 & -1 & 3 \end{bmatrix} - 2\begin{bmatrix} 1 & 3 & 1 \\ 2 & -3 & 4 \end{bmatrix}\right\}\begin{bmatrix} 2 \\ 0 \\ -1 \end{bmatrix} = \begin{bmatrix} x \\ y \end{bmatrix}$

Q.3 Attempt any **FOUR** **(16)**

a) Solve the equations by Cramer's rule

$x + y + z = 3$

$x - y + z = 1$

$x + y - 2z = 0$

P.T.O

b) Resolve into partial fraction $\frac{2x+1}{x^2(x+1)}$

c) If $A=\begin{bmatrix}1 & -3\\ 2 & -1\end{bmatrix}$ & $B=\begin{bmatrix}1 & 0 & 1\\ 2 & -1 & 3\end{bmatrix}$ *verify that* $(AB)^T = B^T A^T$

d) Resolve into partial fraction $\frac{2x+3}{x^2-2x-3}$

e) Show that $\left(\sqrt{3}+1\right)^5-\left(\sqrt{3}-1\right)^5=152$

f) Solve the equation using matrix method

$x+y+x=2$

$y+z=1$

$x+z=3$

Q.4 Attempt any **FOUR** **(08)**

a) Prove that $\operatorname{cosec}^2\theta-\cos^2\theta.\operatorname{cosec}^2\theta=1$

b) Without using calculator find $\sin 15^0$

c) If $\sin A=\frac{1}{2}$, *find* $\sin 3A$

d) Prove that $\cos 2\theta = 1-2\sin^2\theta$

e) Prove that $\sin\left(\theta+\frac{\pi}{6}\right)-\sin\left(\theta-\frac{\pi}{6}\right)=\cos\theta$

f) Find the principal value of $\cos^{-1}\left(\frac{-1}{2}\right)-\sin^{-1}\left(\frac{1}{2}\right)$

Q.5 Attempt any **FOUR** **(16)**

a) Prove that $\frac{\operatorname{cosec}A}{\operatorname{cosec}A-1}+\frac{\operatorname{cosec}A}{\operatorname{cosec}A+1}=2\sec^2 A$

b) Prove that $\sin(A+B)=\sin A\cos B+\cos A\sin B$

c) Simplify $\frac{\cos^2(180^0-\theta)}{\sin(-\theta)}+\frac{\cos^2(270^0+\theta)}{\sin(180^0+\theta)}$

d) Prove that $\frac{\cos 3\theta}{\cos\theta}+\frac{\sin 3\theta}{\sin\theta}=4\cos 2\theta$

e) Prove that $\frac{\sin 4A+\sin 5A+\sin 6A}{\cos 4A+\cos 5A+\cos 6A}=\tan 5A$

f) Prove that $\cos^{-1}\left(\frac{4}{5}\right)+\cos^{-1}\left(\frac{12}{13}\right)=\cos^{-1}\left(\frac{33}{65}\right)$

Q.6 Attempt any **FOUR** **(16)**

a) If A & B are obtuse angles such that $\sin A=\frac{5}{13}$ & $\cos B=\frac{-4}{5}$. Find tan(A+B)

b) prove that $\cos 3\theta = 4\cos^3\theta-3\cos\theta$

c) Prove that $\frac{1-\tan 2\theta.\tan\theta}{1+\tan 2\theta.\tan\theta}=\frac{\cos 3\theta}{\cos\theta}$

d) Prove that $\frac{\sin 8x-\sin 5x}{\cos 7x+\cos 6x}=\sin x+\cos x.\tan\frac{x}{2}$

e) Prove that $\tan^{-1}(x)+\tan^{-1}(y)=\tan^{-1}\left(\frac{x+y}{1-xy}\right)$ *if* $xy<1$

f) Prove that $\tan^{-1}(1)+\tan^{-1}(2)+\tan^{-1}(3)=\pi$

****

GOVERNMENT POLYTECHNIC, KOLHAPUR 416004.

(An Autonomous Institute of Govt. of Maharashtra)

EVEN TERM END EXAM APRIL/MAY -2017

EXAM SEAT NO. | | | | | | |

LEVEL: **FIRST** PROGRAM: **COMMON**

COURSE CODE: **CCF107/X105/R109/CCE107**

COURSE NAME: **ENGINEERING DRAWING -I**

MAX. MARKS: **80** TIME: **4 HRS.** DATE: **04/05/2017**

Instruction:-

1) Answers must be written in the main answer book provided. (and supplements if required)
2) Figure to the right indicates marks.
3) Illustrate your answers with sketches wherever necessary.
4) Use of non-programmable pocket calculator is permissible.
5) Mathematical and other tables shall be made available on request.
6) Assume additional suitable data necessary.
7) Use of Mobile is strictly prohibited.

Q.1 Attempt any **TWO** **Marks (08)**

a) On a plan of a field, a line of 1m long is represented on a drawing by a line of 5cm. construct a diagonal scale to read upto 2m and mark the length of 1m, 6 decimetres & 4cm on it.

b) Illustrate & write down application of following lines

i) Ruled line with zigzag.

ii) Short dashed medium.

c) Construct a scale of 1cm=0.4m to show metres & decimetres and large enough to measure upto 5m. Show a distance of 4m & 6 decimetres on it.

Q.2 Attempt any **FOUR** **(16)**

a) Construct an ellipse when the distance of focus from directrix is equal to 60mm & eccentricity=2/3.

b) The length of a top view of a straight line AB parallel to V.P & inclined at 40^0 to HP is 60mm. Its end A is 10mm above H.P is and 25mm infront of V.P. Draw front & Top views & determine the true length of the line AB.

c) Draw the projections F.V & T.V of a 75mm long straight line, inclined at 60^0 to V.P and its one end 15mm in front of it, parallel to and 25mm above H.P.

d) The top view of a 75mm long line measures 55mm. The line is in V.P, its one end being 25mm above the H.P. Draw its projections (F.V. and T.V)

e) End A & B of a line AB is 15mm & 55mm respectively infront of the V.P Elevation length of line is 60mm. it is parallel to XY line & 15mm above it. Draw Two views of the line & find its true length & inclination with V.P

f) The distance between the projectors through the ends of a line 75mm long is 60mm. Its end M is 15mm above HP & 20mm infront of V.P. Draw its two views when it is parallel to V.P. Determine its inclination with H.P.

Q.3 Attempt any **FOUR** **(16)**

a) Draw an Archemedian spiral of one convolution, the maximum & minimum radii being 80mm & 20mm respectively.

b) Draw a Helix on a cylinder of 50mm diameter of two turns, given pitch equal to 40mm.

c) A disc of diameter 50mm rolls without slip on a plane inclined at an angle of 15^0 to the horizontal. Trace & name the locus of point P on the circumference of the disc.

d) Draw in involute of a hexagon of side 20mm for one complete turn.

P.T.O

e) Draw a hyperbola with asymptotes OB=140 & OA=130 intersecting at an angle of 70^0 and passing trough point P on the curve 36mm from OB & 20mm from OA.

f) A stone is thrown upwards from a building 6m high & in its highest point of flight, it just crosses palm tree 12m high. Trace the path of the projectile, if the distance between the building and the palm tree be 3m. Take suitable scale.

Q.4 Attempt any **TWO** **(08)**

a) A circular plate 50mm diameter has its center 30mm above HP & 35mm infront of VP. Draw the three views of the plate when the surface is perpendicular to VP & inclined at 45^0 to HP.

b) A rhombus having diagonals 60mm & 30mm respectively is resting on a corner in VP. The longer diagonal is parallel to HP & inclined to VP such that front view appears as a square. Determine the angle made by the rhombus with VP.

c) A pentagonal plane of side 30mm is resting on HP on one of its side with the corner opposite to that side, 25mm above HP side on HP is perpendicular to VP. Draw three views of the pentagonal plane & find its inclination with HP.

Q.5 Attempt any **TWO** **(16)**

a) A cone of 50mm diameter & axis 70mm long is resting on HP on a point of its circumference of base such that its axis is parallel to VP & apex is 50mm above HP. Draw its projections.

b) A pentagonal prism base 20mm side & axis 55mm long, is standing on a corner of its base on HP with its axis inclined at 45^0 to HP & parallel to VP. Draw its projections.

c) A hexagonal pyramid base 25mm sides & axis 60mm long has a corner of base in the HP. Its axis makes an angle of 30^0 with HP & parallel to VP. Draw its projections.

Q.6 Attempt any **TWO** **(16)**

a) A hexagonal pyramid base 30mm side & axis 70mm long has its base on HP with an edge of base parallel to VP. A section plane perpendicular to VP & inclined at 45^0 to HP cuts the axis of pyramid 30mm from the apex.
Draw-
   i) Front view (02 marks)
   ii) Sectional top view (03 marks)
   iii) True shape of section. (03 marks)

b) A cylinder of 50mm diameter & axis 70mm long has its axis perpendicular to HP. It is cut by a section plane perpendicular to VP & inclined at 45^0 to HP & intersecting the axis 40mm above the base.
Draw-
   i) Front view (02 marks)
   ii) Sectional top view (03 marks)
   iii) True shape of section (03 marks)

c) A square prism base 40mm side & axis 80mm long, stands vertically on HP with the edges of the base equally inclined to VP. A section plane perpendicular to VP & inclined at 60^0 to HP cuts the axis of prism 15mm from its top end.
Draw-
   i) Front view (02 marks)
   ii) Sectional Top view (03 marks)
   iii) True shape of section. (03 marks)

****

GOVERNMENT POLYTECHNIC, KOLHAPUR – 416004.

(An Autonomous Institute of Govt. Of Maharashtra)

EVEN TERM END EXAM April/ May 2017

EXAM SEAT NO. | | | | | | |

LEVEL : - **FOURTH** PROGRAM : **MECHANICAL ENGINEERING**

COURSE CODE :- **MEE410/ME309**

COURSE NAME :- **MECHANICAL MEASUREMENTS & MECHATRONICS**

MAX. MARKS : **80** TIME : **3 HRS.** DATE :- **03 / 05 / 2017**

Instruction :-

1) Answer to two sections must be written in separate section answer book provided.
2) Figure to the right indicate marks.
3) Illustrate your answers with sketches wherever necessary.
4) Use of non-programmable pocket calculator is permissible.
5) Mathematical and other tables shall be made available o request.
6) Assume additional suitable data necessary.
7) Use of Mobile is strictly prohibited.

Section – I

Marks

Q.1 Attempt any **FOUR** (08)

a) Define the terms i) Range ii) Span.

b) Differentiate between threshold & resolution.

c) How errors are classified?

d) Draw a neat labelled sketch of Eddy current dynamometer.

e) Enlists different types of Direct liquid-level Measurement.

f) Draw a neat labelled sketch of Absorption Hygrometer.

Q.2 Attempt any **FOUR** (16)

a) Describe in detail the principle of operation of linear variable differential transformer with sketch.

b) Sketch a radiation pyrometer, explain its construction and working.

c) How temperature measuring instruments are classified? And draw a neat labelled sketch of Liquid-in-glass thermometer.

d) Enlist any eight requirements of strain gauge considered while designing any strain gauge?

e) Sketch and explain the working of the centrifugal tachometer.

f) Sketch and explain working of commutated capacitor tachometer.

Q.3 Attempt any **FOUR** (16)

a) Draw a block diagram representation of a generalized measurement system. Identify the various elements and point out the function performed by each element.

b) Explain the following terms in detail
   i) Speed of response and measuring lag. ii) Dead time and Dead zone.

c) Explain second order measurement system and give its example.

d) Describe construction and working of Turbine Flow meter.

e) What is Hot Wire Anemometer? Describe its construction and principle of working.

f) Sketch and explain working of Electrodynamics microphone.

P.T.O.

Section – II	Marks

Q.4 Attempt any **FOUR** (08)

a) Define programmable logic controller (PLC)

b) What do you mean by mechatronics?

c) What is data Acquisition system?

d) State meaning of digital to analog converter (DAC)

e) What is valve? State the different types of valve.

f) State the principle of electromagnetic Relay.

Q.5 Attempt any **FOUR** (16)

a) Draw block diagram of programmable logic controller and explain function of each block in brief.

b) Draw architecture of 8051 microcontroller and explain in brief.

c) How data logger works? Explain with neat sketch.

d) Explain working principle of mercury wetted reed relay with neat sketch.

e) Draw and explain pressure control valve.

f) Explain in detail selection criteria for motors.

Q.6 Attempt any **FOUR** (16)

a) Explain microprocessor with respect to following points i) Buses ii) Memory.

b) Compare microprocessor and microcontroller.

c) Draw and explain A/D flash converter.

d) Explain following pneumatic actuator i) Linear single rod single acting actuator.

e) Explain features of 8051 microcontroller.

f) Draw construction of stepper motor and explain its principle of operation.

****

GOVERNMENT POLYTECHNIC, KOLHAPUR – 416004.

(An Autonomous Institute of Govt. Of Maharashtra)

EVEN TERM END EXAM April/ May 2017

EXAM SEAT NO. | | | | | | |

LEVEL : - **FOURTH** PROGRAM : **MECHANICAL ENGINEERING**

COURSE CODE :- **MEE403**

COURSE NAME :- **ADVANCED MANUFACTURING PROCESS**

MAX. MARKS : **80** TIME : **3 HRS.** DATE :- **27 / 04 / 2017**

Instruction :-

1) Answer to two sections must be written in separate section answer book provided.
2) Figure to the right indicate marks.
3) Illustrate your answers with sketches wherever necessary.
4) Use of non-programmable pocket calculator is permissible.
5) Mathematical and other tables shall be made available o request.
6) Assume additional suitable data necessary.
7) Use of Mobile is strictly prohibited.

Section – I

Marks

Q.1 Attempt any **FOUR** (08)

a) Enlist the milling operation.

b) Write the four advantages of gear hobbing.

c) Give the advantages of transfer machine.

d) Define transfer machine and give its classification.

e) How Non-conventional machining processes are classified?

f) Give four advantages of LBM.

Q.2 Attempt any **FOUR** (16)

a) Explain with neat sketch Gang milling operation.

b) Suggest milling operation to produce
i) Key way on shaft ii) 'V' block shape iii) Concave surface iv) T slot in machine table.

c) State gear grinding with neat sketch.

d) Explain pawl type transfer mechanism.

e) Define the non-conventional machining process. Explain its need and importance in industry.

f) Draw a neat sketch wire EDM and label it. Suggest a fluid used for cutting intricate components.

Q.3 Attempt any **TWO** (16)

a) Explain with neat sketch following milling operation.
i) Side and Face Milling ii) Plain Milling. iii) End Milling.

b) What is gear hobbing process? State its advantages and limitations.

c) Draw a neat sketch of electro chemical machining. Explain its working; also state its advantages.

P.T.O.

Section – II	Marks

Q.4 Attempt any **TWO** (08)

a) Describe the requirements under which CNC machines are best suitable.

b) Explain the terms preparatory function and miscellaneous functions stating where these are used in a part programme.

c) What are the need of Repair Cycle Analysis?

Q.5 Attempt any **FOUR** (16)

a) Draw the neat sketch of vertical machining centre and explain principal parts of it.

b) State the advantages and limitations of CNC machines.

c) How will you classify CNC machines based on control system features? Describe them with the help of neat sketches.

d) Identify the following CNC codes i) G02 ii) G71 iii) G80 iv) M06.

e) Describe the basic maintenance practice for bearing.

f) State the advantages of predictive maintenance.

Q.6 Attempt any **TWO** (16)

a) With the help of suitable figure, explain following with reference to CNC machines. i) Absolute & incremental dimensioning. ii) Axis identification for lathe machine.

b) Explain the importance and designation of subroutines and canned cycles used in part programming.

c) i) Prepare a maintenance record chart for breakdown maintenance.
ii) What are the benefits of good housekeeping?

****

GOVERNMENT POLYTECHNIC, KOLHAPUR 416004.

(An Autonomous Institute of Govt. of Maharashtra)

EVEN TERM END EXAM APRIL/MAY -2017

EXAM SEAT NO. | | | | | | |

LEVEL: **THIRD** PROGRAM: **MECHANICAL ENGINEERING**

COURSE CODE: **MEE303/ME203** COURSE NAME: **MACHINE DRAWING**

MAX. MARKS: **80** TIME: **4 HRS.** DATE: **28/04/2017**

Instruction:-

1) Answers must be written in the main answer book provided. (and supplements if required)
2) Figure to the right indicates marks.
3) Illustrate your answers with sketches wherever necessary.
4) Use of non-programmable pocket calculator is permissible.
5) Mathematical and other tables shall be made available on request.
6) Assume additional suitable data necessary.
7) Use of Mobile is strictly prohibited.

Q.1 Draw conventional representation with symbol for **ANY TWO** of the following. **Marks (08)**

a) Globe valve and nipple joint pipe

b) Spur gear and worm gear.

c) Roller bearing and diamond knurling

Q.2 Attempt any **FOUR** **(16)**

a) A T-section formed by welding two M.S plates by fillet weld of 4mm leg length. The welding is continuous on arrow side and regular intermittent on other side, starting with a welded length of 30mm. the total number of weld elements are three followed by unwelded length of 25mm. prepare free hand sketch.

b) What is the meaning of symbol 'X' and 'Y' refer. Fig. no 2.1

c) The shaft has a size of $35^{-0.02}_{-0.04}$ and hole has size of $35^{+0.02}_{+0.00}$ Find the allowances to determine the type of fit between them.

d) Draw conventional representation with symbol for the following

i) lay angular in both direction to the plane

ii) Radial runout.

e) Draw the machining symbol to indicate a process of grinding, sampling length 0.8mm, roughness valve 8μm and with machining allowance 2 micron.

f) Explain with neat sketch 3 types of fits.

Q.3 Attempt any **ONE** **(16)**

A a) A cone diameter of base 80mm and height 90mm is resting on HP on its base. A hole of 50mm diameter is drilled through the cone. The axis of the hole in 28mm above and parallel to the base of cone. The axis of hole is parallel to the V.P also Draw three views of cone showing lines of intersection of hole with cone. **(08 marks)**

P.T.O

b) Fig.No.3.1 shows front view partial side view and partial auxiliary view. Draw given views and complete the side view. **(08 marks)**

B a) A vertical square prism of side 60mm and height 110mm is completely penetrated by a horizontal square prism of 45mm side and 110mm length. The axis of horizontal prism is 18mm in front of the axis of vertical prism. All the rectangular faces of both the prism are equally inclined to V.P. Draw the three views showing lines of intersection **(08 marks)**

b) Fig.No.3.2 shows the front view and left hand side view of an object. Draw the given views and auxiliary top view looking in direction of X. **(08 marks)**

Q.4 Attempt any **ONE** **(08)**

a) Fig.No.1 shows assembly of Lathe Tail stock.

Draw the part drawings of following components

i) Body- sectional F.V and S.V (06 marks)

ii) Center (02 marks)

b) Figure. No.1 shows assembly of Lathe Tail stock. Draw following details of the components.

i) Spindle Bearing- sectional F.V and S.V (04 marks)

ii) Hand wheel – sectional F.V and S.V (04 marks)

Q.5 Figure 2. Shows the assembly of pedestal bearing. Draw the following details. **16**

i) Body (06 marks)

ii) Brass (04 marks)

iii) Cap (04 marks)

Mention appropriate dimensional tolerances, geometrical tolerances & grades (02 marks)

Q.6 Attempt any **ONE** **(16)**

a) Figure 3 shows the details of universal coupling. Draw the following views of the assembly.

i) Sectional front view (08 marks)

ii) Top view (06 marks)

Prepare the part list and give overall dimensions (02 marks)

b) Figure 4 shows the details of foot step Bearing. Assemble the parts and draw following views.

i) Sectional F.V (08 marks)

ii) Top view (06 marks)

Prepare the bill of material (02 marks)

****

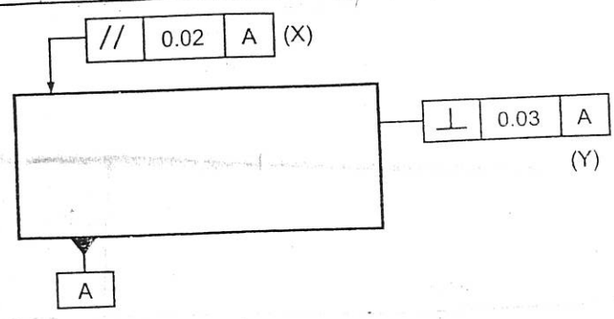

Q2.(b) FIG. NO. 2.1

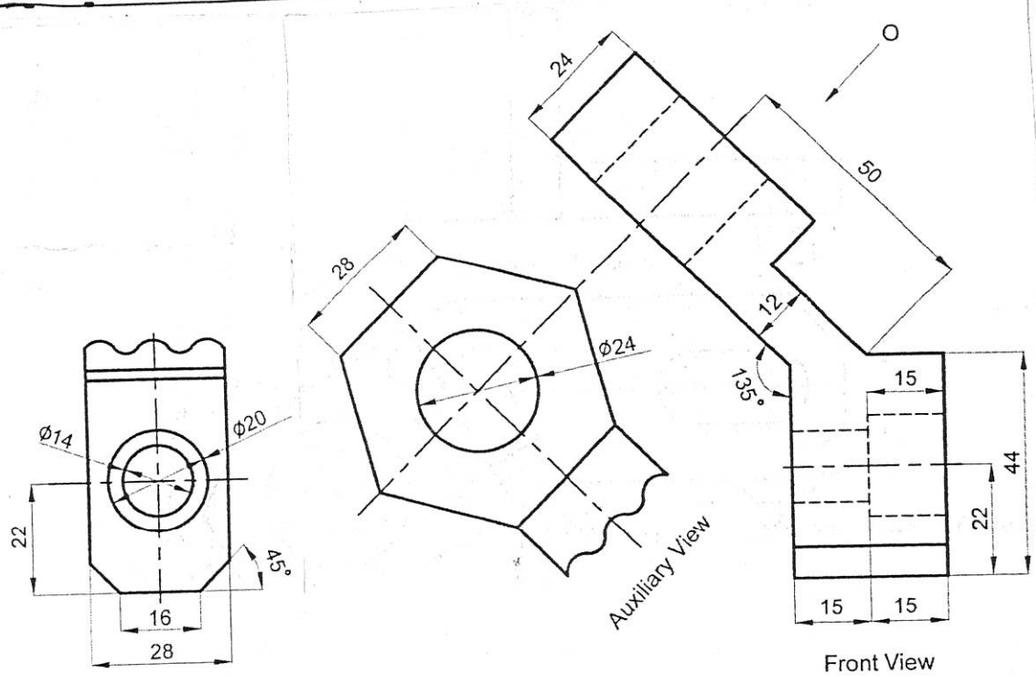

Q.3 (b) FIG. NO. 3.1

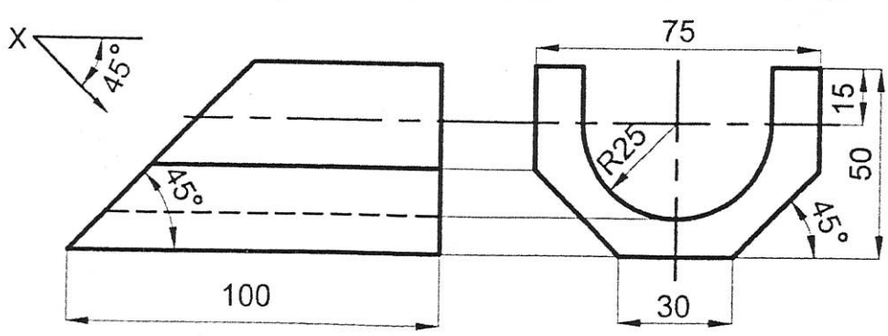

Q3 B] (b) FIG. NO. 3.2

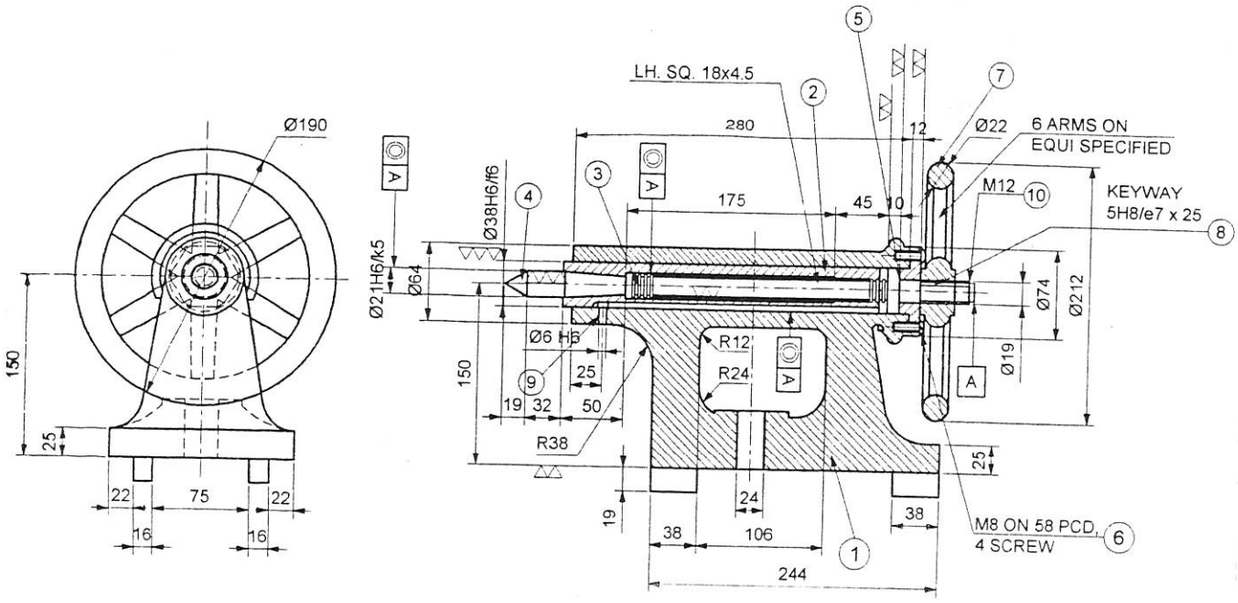

ASSEMBLY OF
TAIL STOCK

PART LIST

PART NO.	PART NAME	MATL.	QTY.
1	BODY	C.I.	1
2	BARREL	M.S.	1
3	SPINDLE	M.S.	1
4	CENTER	C.S.	1
5	SPINDLE BEARING	C.I.	1
6	SCREW	M.S.	1
7	HAND WHEEL	C.I.	1
8	KEY	M.S.	1
9	FEATHER	M.S.	1
10	NUT	M.S.	1

Q.4 (a) (b) Fig. 1. Assembly of Lathe Tail Stock

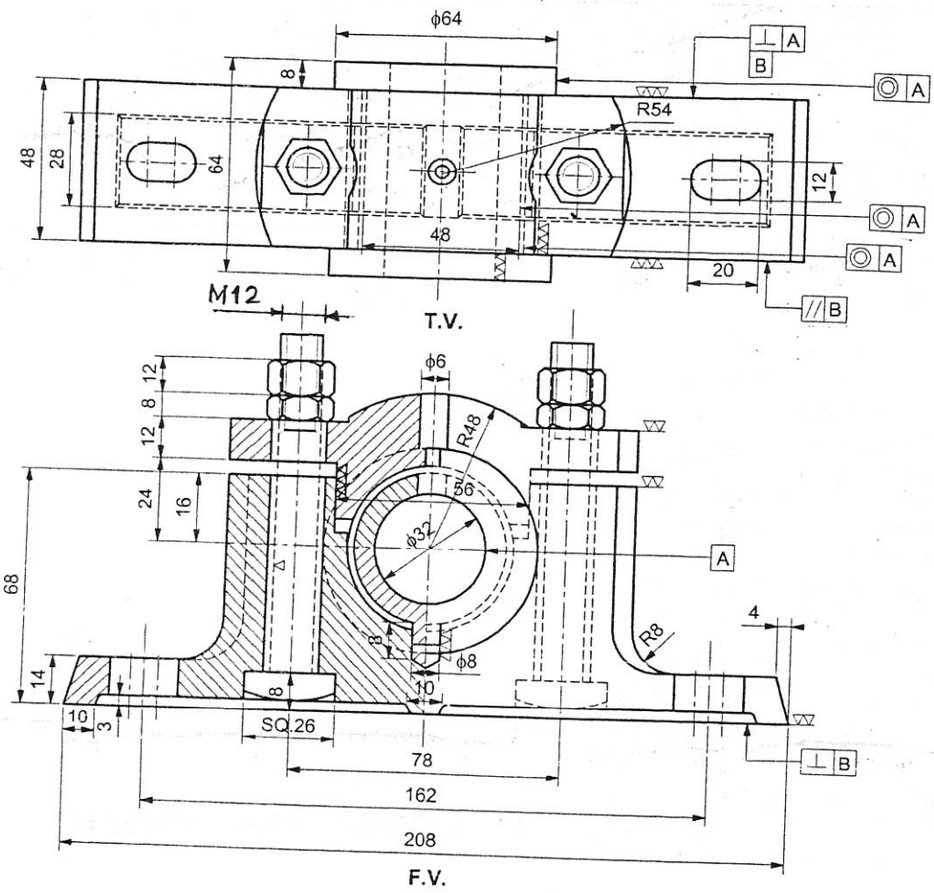

PART LIST

PART NO.	PART NAME	METAL	QTY.
1.	BODY	C.I.	1
2.	BRASS	G.M.	1
3.	CAP	C.I.	1
4.	BOLT	M.S.	2
5.	NUT	M.S.	2
6.	LOCK NUT	M.S.	2

Q.5 Fig. 2. Assembly of Pedestal Bearing

(P.T.O.)

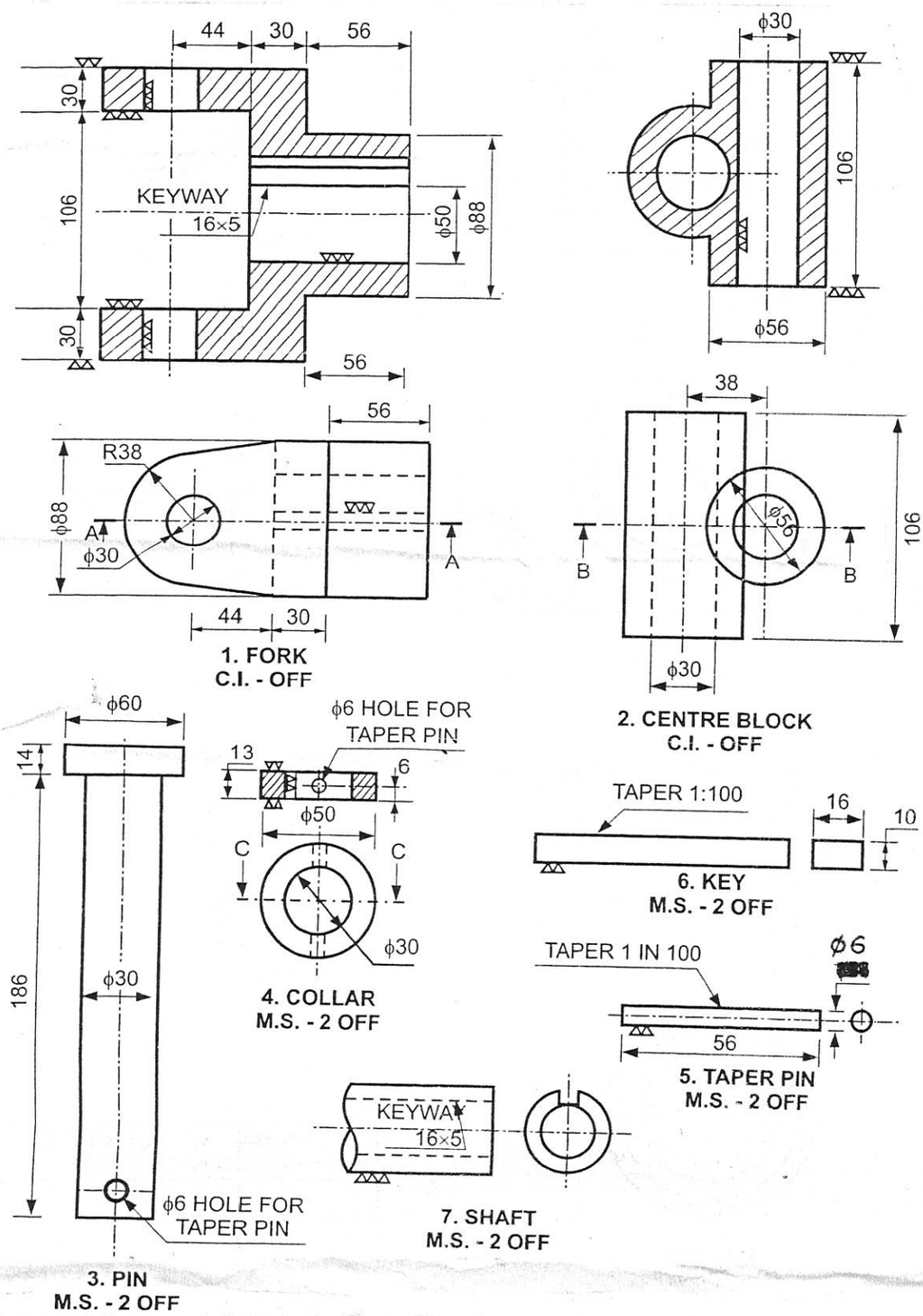

Q 6. (a) Fig. 3. Details of Universal Coupling

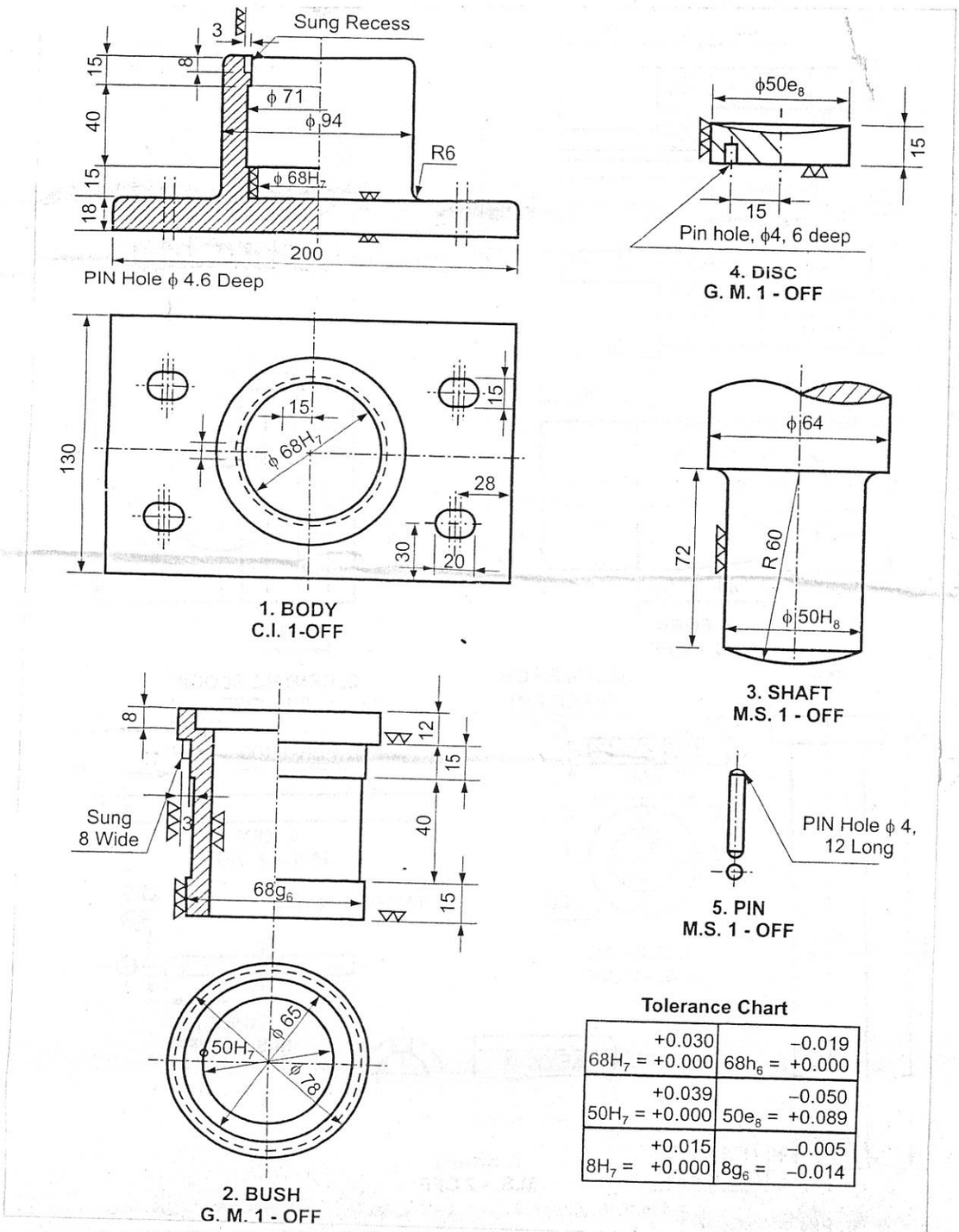

Tolerance Chart

$68H_7 = {}^{+0.030}_{+0.000}$	$68h_6 = {}^{-0.019}_{+0.000}$
$50H_7 = {}^{+0.039}_{+0.000}$	$50e_8 = {}^{-0.050}_{+0.089}$
$8H_7 = {}^{+0.015}_{+0.000}$	$8g_6 = {}^{-0.005}_{-0.014}$

Q 6.(b) Fig. 4. Details of Foot Step Bearing

END

GOVERNMENT POLYTECHNIC, KOLHAPUR 416004.

(An Autonomous Institute of Govt. of Maharashtra)

EVEN TERM END EXAM APRIL/MAY -2017

EXAM SEAT NO. | | | | | | |

LEVEL: **FIFTH** PROGRAM: **MECHANICAL ENGINEERING**

COURSE CODE: **MEE508/ME409** COURSE NAME: **REFRIGERATION AND AIR CONDITIONING**

MAX. MARKS: **80** TIME: **3 HRS.** DATE: **28/04/2017**

Instruction:-

1) Answer to two sections must be written in separate section answer book provided.
2) Figure to the right indicates marks.
3) Illustrate your answers with sketches wherever necessary.
4) Use of non-programmable pocket calculator is permissible.
5) Mathematical and other tables shall be made available on request.
6) Assume additional suitable data necessary.
7) Use of Mobile is strictly prohibited.

Section – I

Marks

Q.1 Attempt any **FOUR** **(08)**

a) Define Ton of refrigeration.

b) Why refrigeration is necessary?

c) List desirable properties of absorbent.

d) Name the refrigerant:$C_2Cl_2F_4$

e) State the advantages of hermetically sealed compressor.

f) State the functions of expansion devices.

Q.2 Attempt any **FOUR** **(16)**

a) Illustrate with a schematic diagram the difference between Heat engine & refrigerator.

b) An ideal refrigerator works between -10^{0}C and +35^{0}C. If it is allowed to work between -15^{0}C and +35^{0}C. What effect will be on its C.O.P? Explain.

c) Draw Bell-Coleman cycle (P-V & T-S diagram). State advantages & disadvantages of air refrigeration system.

d) What is 'eco-friendly refrigerants'?

e) Explain the working of thermostatic expansion valve with neat sketch.

f) Draw a labelled sketch of centrifugal compressor and explain its working.

Q.3 Attempt any **TWO** **(16)**

a) What is the function of a condenser in a refrigeration cycle? Explain the working of evaporative condenser with a neat sketch.

b) i) How refrigeration is achieved by throttling of gas?

ii) Draw a neat labelled sketch of a pulse tube refrigeration.

c) A simple saturation cycle using R-12 is designed for taking a load of 10 tonners. The vapour is in dry saturated condition at the beginning of the compression. The evaporator temperature =260^{0}K and condenser temperature = 308^{0}K.

P.T.O

find

i) Mass flow rate

ii) Power required in KW

iii) C.O.P

Given from P-h diagram: h_1=185 KJ/kg, h_2=206KJ/kg & h_{f3}=h_4=70KJ/kg?

Section – II **Marks**

Q.4 Attempt any **FOUR** **(08)**

a) What are the different methods of humidification in air conditioning system?

b) Define sensible heat factor (SHF)

c) For cooling load calculation which kinds heat are taken in consideration?

d) What is mean by comfort air conditioning?

e) Name the components of window air conditioning system.

f) Name different types of centrifugal fans used in air conditioning system.

Q.5 Attempt any **FOUR** **(16)**

a) Explain the following terms in short

i) Occupancy load

ii) Wall gain load

b) Explain in brief infiltration of air.

c) Explain how human body behaves in winter season.

d) Define i) moist air ii) wet bulb temperature iii) specific humidity

e) Sketch a Psychometric chart and show on it different properties of air which can find.

f) With the help of Psychometric chart find the following properties of air if the air is at 25^0C DBT and 65 RH.

i) Dew point temperature

ii) Wet bulb temp

iii) Specific volume of air

iv) Enthalpy of air

Q.6 Attempt any **FOUR** **(16)**

a) Write short note on classification of air conditioning system.

b) Compare comfort air conditioning system with commercial air conditioning system.

c) Draw neat labled sketch of package type air conditioning system.

d) Define 'Duct' and state the materials used for ducts.

e) What is mean by axial flow fans? What are different types of axial flow fans used in air conditioning system?

f) Classify thermal insulators enlist the different properties of thermal insulators.

****

GOVERNMENT POLYTECHNIC, KOLHAPUR – 416004.

(An Autonomous Institute of Govt. Of Maharashtra)

EVEN TERM END EXAM April/ May 2017

EXAM SEAT NO. | | | | | | |

LEVEL : - **FIFTH** PROGRAM : **MECHANICAL ENGINEERING**

COURSE CODE :- **MEE509/ME410**

COURSE NAME :- **AUTOMOBILE ENGINEERING**

MAX. MARKS : **80** TIME : **3 HRS.** DATE :- **28 / 04 / 2017**

Instruction :-

1) Answer to two sections must be written in separate section answer book provided.
2) Figure to the right indicate marks.
3) Illustrate your answers with sketches wherever necessary.
4) Use of non-programmable pocket calculator is permissible.
5) Mathematical and other tables shall be made available o request.
6) Assume additional suitable data necessary.
7) Use of Mobile is strictly prohibited.

Section – I

Marks

Q.1 Attempt any **FOUR** (08)

a) List various types of automobile body constructions.

b) Write function of differential in an automobile.

c) Why king pin inclination is provided in an automobile.

d) Write any two functions of automobile transmission system.

e) Write principle of working of braking system.

f) List any two requirements of steering system.

Q.2 Attempt any **FOUR** (16)

a) Explain the importance of aerodynamic shape of a car body.

b) Explain camber and castor with neat sketch.

c) Compare disc brake with drum brake.

d) What is Tractive effort and Tractive resistance?

e) With neat sketch, explain working of single plate clutch.

f) With neat sketch, explain construction of propeller shaft.

Q.3 Attempt any **FOUR** (16)

a) Explain with neat sketch working of hydraulic braking system.

b) Define the term 'Automobile'. Give classification of automobile.

c) With neat sketch, explain working of rack and pinion type steering gear box.

d) List various types of rear axles with their application. Explain with neat sketch any one type of rear axle.

e) With neat sketch, explain working of differential in an automobile.

f) With neat sketch, explain working of constant mesh gear box.

Section – II	Marks

Q.4 Attempt any **FOUR** (08)

a) Why suspension is necessary in automobile?

b) Classify suspension system.

c) Give classification of tyre.

d) Enlist the properties of good tyre.

e) Define battery rating.

f) Why modern car uses R134 a refrigerant used instead of R-12?

Q.5 Attempt any **FOUR** (16)

a) Explain torsion bar for rear suspension.

b) Explain working of air suspension system with sketch.

c) Differentiate spring and shock absorber.

d) Draw neat sketch of tube tyre and label it.

e) Differentiate tube and tubeless type.

f) State various factors affecting tyre life.

Q.6 Attempt any **FOUR** (16)

a) Draw sketch of Battery and Label the parts.

b) Explain electronic ignition system with sketch.

c) Explain with neat sketch working alternator.

d) Draw working of fuel level gauge system.

e) Explain construction of water temperature gauge.

f) Why micro processor is used in modern vehicles?

****

GOVERNMENT POLYTECHNIC, KOLHAPUR – 416004.

(An Autonomous Institute of Govt. Of Maharashtra)

EVEN TERM END EXAM April/ May 2017

EXAM SEAT NO. | | | | | | |

LEVEL : - **THIRD** PROGRAM : **MECHANICAL ENGINEERING**

COURSE CODE :- **MEE307/ME207/M207**

COURSE NAME :- **APPLIED ELECTRONICS**

MAX. MARKS : **80** TIME : **3 HRS.** DATE: - **25 / 04 / 2017**

Instruction:-

1) Answers must be written in the main answer book provided.(and supplements if required)
2) Figure to the right indicate marks.
3) Illustrate your answers with sketches wherever necessary.
4) Use of non-programmable pocket calculator is permissible.
5) Mathematical and other tables shall be made available on request.
6) Assume additional suitable data necessary.
7) Use of Mobile is strictly prohibited.

Marks

Q.1 Attempt any **FOUR** (08)

a) Define intrinsic and extrinsic semiconductor.

b) Draw symbol for types of transistor.

c) Draw a labeled circuit diagram of any full wave rectifier.

d) Define line regulation.

e) Draw a circuit diagram of IC 78XX regulator.

f) Define regulated power supply.

Q.2 Attempt any **FOUR** (16)

a) Explain characteristic of PN junction diode.

b) Draw a circuit diagram of single stage common emitter amplifier.

c) With construction diagram explain N-channel JFET.

d) Compare L & C filter with any four points.

e) With circuit, diagram and waveform explain halfwave rectifier.

f) With block diagram explain concept of on line UPS.

Q.3 Attempt any **FOUR** (16)

a) Give the difference between common emitter & common base configuration of transistor.

b) Explain characteristic of Zener diode.

c) With diagram, explain working of LC filter.

d) Explain bridge rectifier with diagram and waveform.

e) With block diagram, explain IC 723 power supply.

f) Explain concept of constant current limiting and fold back current limiting.

PTO

Q.4 Attempt any **FOUR** (08)

a) Draw the symbol and truth table of NOR and AND gate.

b) Convert the following binary number into its decimal equivalent

$(1011.01)_2 = (-----)_{10}$.

c) What are the different triggering methods in digital circuits?

d) Convert the following expression into canonical SOP form $Y = A + B$.

e) Draw circuit diagram of full adder.

f) Define flip-flop.

Q.5 Attempt any **FOUR** (16)

a) Covert $(2003.31)_{10}$ into its equivalent hex number.

b) Solve the following expression using K-map.

$F(A,B,C,D) = \Sigma M(1,5,6,7,11,12,13,15)$

c) Draw the block diagram of multiplexer and explain it.

d) Explain the working of J-K flipflop.

e) Explain PIPO with neat diagram.

f) Draw and explain half substractor.

Q.6 Attempt any **TWO** (16)

a) State and explain De'Morgan's first and second theorem.

b) Draw the divide by 4 asynchronous up counter using T-FF. Write truth table. Draw timing diagrams.

c) i) Compare multiplexer and demultiplexer (any 4 points)

ii) Simplify the following expression to get canonical POS

$$Y = \left(A+B+\overline{CC}\right)\left(A+C+\overline{BB}\right)\left(B+\overline{C}+A\overline{A}\right)$$

****

GOVERNMENT POLYTECHNIC, KOLHAPUR 416004.

(An Autonomous Institute of Govt. of Maharashtra)

EVEN TERM END EXAM APRIL/MAY -2017

EXAM SEAT NO. | | | | | | |

LEVEL: **THIRD** PROGRAM: **MECHANICAL ENGINEERING**

COURSE CODE: **MEE310/ME210** COURSE NAME: **ENGINEERING METALLURGY & MATERIALS**

MAX. MARKS: **80** TIME: **3 HRS.** DATE: **29/04/2017**

Instruction:-

1) Answers must be written in the main answer book provided. (and supplements if required)
2) Figure to the right indicates marks.
3) Illustrate your answers with sketches wherever necessary.
4) Use of non-programmable pocket calculator is permissible.
5) Mathematical and other tables shall be made available on request.
6) Assume additional suitable data necessary.
7) Use of Mobile is strictly prohibited.

Q.1 Attempt any **FOUR** **Marks (08)**

a) Define metallurgy.

b) What is solid solution?

c) How the atoms are arranged in face centered cubic lattice structure.

d) Give two benefits of equilibrium diagram.

e) Why peritetic reaction in iron-carbon diagram is not practically important?

f) What are the types of cast Iron?

Q.2 Attempt any **FOUR** **(16)**

a) Write need & scope of metallurgy.

b) What are different types of imperfection in crystal? Explain with sketches.

c) Differentiate between the cooling curve for pure metal and alloys.

d) Draw Iron-Iron carbide diagram. Show various reactions and phases in it.

e) How to select engineering material? And classify engineering material.

f) Explain effect of alloying element on Fe-C diagram.

Q.3 Attempt any **FOUR** **(16)**

a) Show the various types of crystal structure.

b) Explain polymorphism & allotropy.

c) Describe the process of constructing a binary equilibrium diagram.

d) Describe the Gibb's phase rule with example.

e) Explain microstructure of slowly cooled steels.

f) Explain the changes in the mechanical properties with changes in the carbon content of steel.

Q.4 Attempt any **FOUR** **(08)**

a) How martensite structure is formed from austenite?

b) What is carburizing.

c) Why tempering is done after hardening?

d) State composition of any two copper alloys.

e) Write any four application of non –destructive test.

f) State working principal of Eddy current testing.

Q.5 Attempt any **FOUR** **(16)**

a) Draw TTT diagram. Write steps to construct TTT diagram.

b) How does austenite structure transform to pearlite during slow cooling of steel?

c) Explain hardening of steel. State different quenching media.

d) Compare the normalizing and annealing in any four points.

e) Explain process of nitriding. State its two advantages and disadvantages.

f) Explain flame hardening process. State its two merits and demerits.

Q.6 Attempt any **FOUR** **(16)**

a) State the composition of Duralumin. State its any three properties and applications.

b) What are the various types of Bearing alloys?

c) Write any four properties and applications of titanium.

d) Write any six properties of nickel. State various nickel alloys.

e) Explain Radiography of metal test with neat labelled sketch.

f) How ultrasonic test is performed to find the internal defect?

****

GOVERNMENT POLYTECHNIC, KOLHAPUR 416004.

(An Autonomous Institute of Govt. of Maharashtra)

EVEN TERM END EXAM APRIL/MAY -2017

EXAM SEAT NO. | | | | | | |

LEVEL: **FOURTH.** PROGRAM: **MECHANICAL ENGINEERING.**

COURSE CODE: **MEE402/ME302** COURSE NAME: **MACHINE DESIGN.**

MAX. MARKS: **80** TIME: **3 HRS.** DATE: **25/04/2017**

Instruction:-

1) Answer to two sections must be written in separate section answer book provided.
2) Figure to the right indicates marks.
3) Illustrate your answers with sketches wherever necessary.
4) Use of non-programmable pocket calculator is permissible.
5) Mathematical and other tables shall be made available on request.
6) Assume additional suitable data necessary.
7) Use of Mobile is strictly prohibited.

Section – I

Marks

Q.1 Attempt any **FOUR** **(08)**

a) List the basic series of preferred sizes.

b) Mention any four color and its meaning in aesthetic design of product.

c) Why greater factor of safety is taken for design of C.I. products?

d) Define "Maximum Normal stress theory".

e) Give the main application of power screw.

f) What is the self locking screw. Mention its condition.

Q.2 Attempt any **FOUR** **(16)**

a) Define Ergonomic. Explain ergonomic consideration in design.

b) State the advantages and disadvantages of C.I. from design consideration.

c) A cantilever bar is subject to 5KN load and 2kNm torsion. Calculate maximum principal stress at a point 'A'.

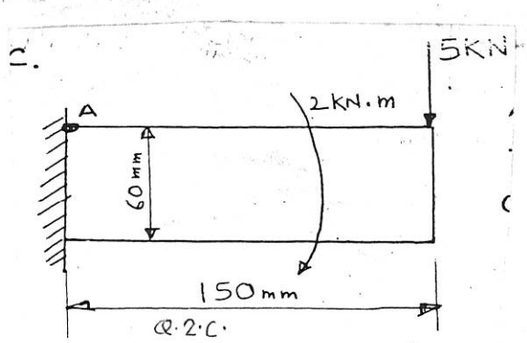

Q.2.C.

d) Explain the shear stress and shear strain induced into component.

e) A power screw is subjected to load of 80 KN and rotating at a speed of 40 rpm. A screw is double start and major dia. is 50mm and pitch is 8mm. Coefficient of friction is 0.15. Neglect collar friction. Calculate power required to drive the screw.

f) Describe the preload in bolt and its torque requirement.

P.T.O.

Q.3 Attempt any **TWO.** **(16)**

a) Design a cotter joint to transmit 75KN load; following are permissible stresses:

Permissible tensile stress ft=80N/mm^2

Permissible compressive stress fc=150N/mm^2

Permissible shear stress fs=60N/mm^2

Material is similar for all components of cotter joint.

b) A power screw body is subjected to axial force and torsinal moment. Explain the stresses induce in screw and nut.

c) A structural connection shown in fig. subjected to eccentric force of 14KN. All bolts are identical. The permissible shear stress of bolt is 70 N/mm^2.Calculate the bolt diameter.

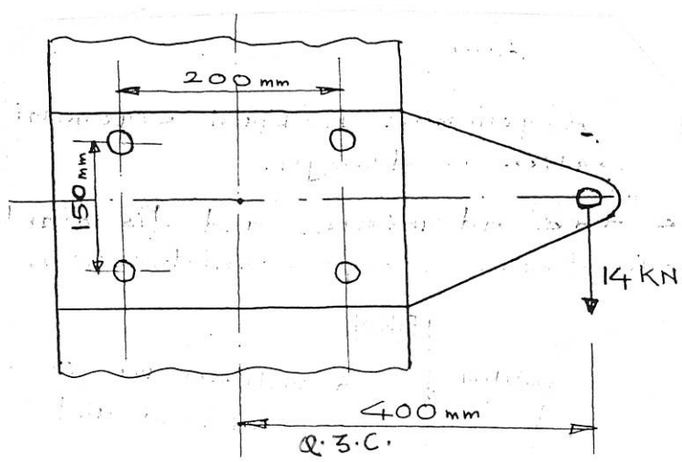

Section – II **Marks**

Q.4 Attempt any **FOUR** **(08)**

a) Define endurance limit.

b) Define stress concentration.

c) Draw Soderberg and Goodman diagram.

d) Name the types of keys.

e) Classify Ball Bearings.

f) Define equivalent dynamic load.

Q.5 Attempt any **TWO** **(16)**

a) What is shaft? Write down an equation of shaft diameter design based on strength criteria and torsional rigidity criteria. Name the terms used with their units.

P.T.O.

b) A helical spring is made from a wire of 8mm diameter and has outside diameter 90mm. If the permissible shear stress is 350 N/mm^2 and modulus of rigidity $84KN/m^2$.Find the axial load which the spring can carry and the deflection per active turn,

1) Neglecting the effect of curvature
2) Considering the effect of curvature.

c) In a pair of spur gear, the no. of teeth on the pinion and the gear are 20 and 100 respectively. The module is 6mm. Calculate;

i) The centre distance.
ii) The P.C.D. of the pinion and the gear.
iii) Addendurn and dedendum.
iv) The gear ratio.

Q.6 Attempt any **TWO.** **(16)**

a) A mild steel shaft is supported on two bearings 1m apart and transmits 15 kW at 300rpm to a pulley of 200mm diameter at a distance of 300mm from one and end. The belt passing over the pulley is vertical and the ratio of belt tension is 2. Pulley weighs 500N. Design suitable shaft diameter. Take permissible stresses as $70N/mm^2$in tension and 50 N/mm^2 in shearing.

b) 1) Explain mounting of bearings.
2) Classify the gears with one example each.

c) The spring of a spring balance elongates by 150mm when subjected to a load of 400N. The spring index is 6. Take permissible shear stress for the spring material as $540N/mm^2$. Consider the effect of direct shear and wire curvature. $G=8.4x\ 10^4\ N/mm^2$ find,

1) The wire diameter and coil diameter.
2) Number of active turns required.

****

GOVERNMENT POLYTECHNIC, KOLHAPUR 416004.

(An Autonomous Institute of Govt. of Maharashtra)

EVEN TERM END EXAM APRIL/MAY -2017

EXAM SEAT NO. | | | | | | |

LEVEL: **THIRD** PROGRAM: **MECHANICAL ENGINEERING**

COURSE CODE: **MEE305/ME205** COURSE NAME: **THEORY OF ENGINEERING DESIGN**

MAX. MARKS: **80** TIME: **3 HRS.** DATE: **26/04/2017**

Instruction:-

1) Answers must be written in the main answer book provided. (and supplements if required)
2) Figure to the right indicates marks.
3) Illustrate your answers with sketches wherever necessary.
4) Use of non-programmable pocket calculator is permissible.
5) Mathematical and other tables shall be made available on request.
6) Assume additional suitable data necessary.
7) Use of Mobile is strictly prohibited.

Q.1 Attempt any **FOUR** **Marks (08)**

a) Define Poissons ratio.

b) Date Hooks law.

c) Define modulus of resilience.

d) State the relation between shear force & bending moment.

e) State perpendicular axis theorem.

f) Find radius of gyration for circle of dia'd' about centroidal axis.

Q.2 Attempt any **FOUR** **(16)**

a) A mild steel flat 100mm wide, 12mm thick and 5m long carries an axial load of 20KN. Find stress, strain and change in length, E=2.1 x10^5MPa

b) Determine the total elongation of bar as shown in figure E=2x10^5N/mm^2

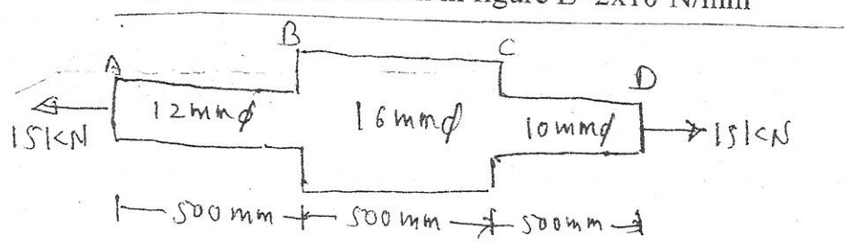

c) A steel bar 40mmx40mm in section and 3m length is subjected to an axial pull of 128KN. If the change in length as 1.2mm (increase) change in width and thickness is 0.0048mm (decrease), Calculate the modulus of elasticity & poissons ratio.

d) A square rod 10mmx10mm in cross section and 1000mm long is fixed at both ends. Determine the end reactions due to rise in temperature of 50^0C. E= 2x10^5MPa and α =12x10^{-6}/ ^{0}C

e) A steel rod 32mm in diameter is 3m long. Find the work done when an axial pull of 80KN is suddenly applied to it. Calculate the maximum instantaneous stress and elongation produced E=200GPa

f) An unknown weight falls through 20mm on a collar attached rigidly to the lower end of the rod 2m long and 600mm^2 in c/s. Determine the value of unknown weight if the maximum stress in the rod is 150MPa. E=200KN/mm^2

Q.3 Attempt any **FOUR** **(16)**

a) Draw SFD for the cantilever beam loaded as described below.
Span=3m (AD). End A is fixed and it carries a full span udl of 10KN/m. AB=BC=CD=1m. It also carries point loads of 40KN, 50KN and 30KN at B, C and D respectively.

b) Solve Q3 (a) for bending moment and draw BMD.

c) A simply supported beam of span 4m carries udl of 25KN/m over entire span. Draw SFD & BMD

d) Draw SFD & BMD for cantilever beam as shown in fig.

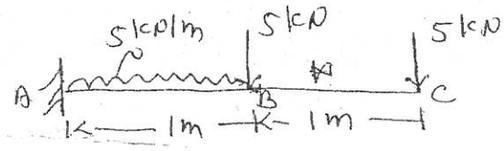

e) Find moment of inertia about both centriodal axes for an equal angle 100mmx100mmx10mm

f) Calculate M.I of the section as shown figure about axis passing through bottom of rectangle (1)—(1)

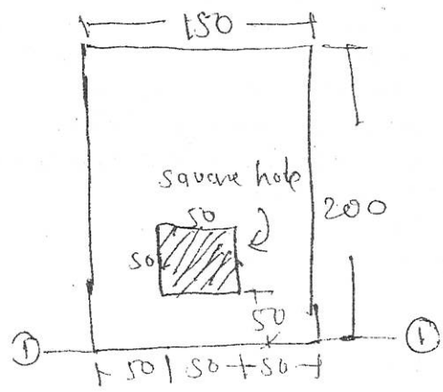

Q.4 Attempt any **FOUR** **(08)**

a) Draw shear stress distribution diagram for L-section.

b) Write formula for max and min stresses developed due to direct and eccentric loading.

c) Define- neutral axis & moment of resistance

d) Define principal stresses & obliquity.

e) State & explain meaning of each term in torsional equation.

f) Explain the term polar modulus of section in solid circular shaft.

Q.5 Attempt any **TWO** **(16)**

a) A simply supported beam having span 6m is made up of symmetrical 'I' section with flanges 100mmx10mm and web 200x10mm. if permissible bending stress is 120MPa, find moment of resistance of beam. Also find maximum intensity of UDL over entire span.

b) In certain machine, hollow circular shaft of external diameter 500mm and 50 thick is subjected to compressive load of 120kN at an eccentricity 40mm from the axis of shaft. Calculate maximum & minimum intensities of stresses in shaft with stress distribution diagram.

c) A simply supported beam of span 5m & rectangular section with size 200mmx300mm deep is subjected to UDL of 2.5kN/m to overall span. Calculate max shear stress developed in beam. Also show the shear stress distribution diagram.

Q.6 Attempt any **TWO** **(16)**

a) A steel plate is subjected to two perpendicular tensile stresses 60MPa & 40MPa. Find out

   i) Resultant stress on plane making angle 30^0 to plane of 60MPa

   ii) Principal stress and its position. Use analytical or graphical method.

b) A solid shaft is required to transmit 50kW power at 200rpm. The maximum torque may exceed the average torque by 30%. Determine the diameter of the shaft if shear stress is not to exceed 70MPa. Take C=80GPa and also find angle of twist over a length of 2.5m

c) A solid circular shaft is replaced by a hollow circular shaft of same material whose external diameter is twice the internal diameter to transmit the same power. Find saving in material (if any) as both shafts are having same strength

****

GOVERNMENT POLYTECHNIC, KOLHAPUR 416004.

(An Autonomous Institute of Govt. of Maharashtra)

EVEN TERM END EXAM APRIL/MAY -2017

EXAM SEAT NO. | | | | | | |

LEVEL: **FIRST** PROGRAM: **CE/ME/SM/MT**

COURSE CODE: **CCF101/CCE101/X102/X108/R103/R104**

COURSE NAME: **ENGINEERING PHYSICS**

MAX. MARKS: **80** TIME: **3 HRS.** DATE: **26/04/2017**

Instruction:-

1) Answers must be written in the main answer book provided. (and supplements if required)
2) Figure to the right indicates marks.
3) Illustrate your answers with sketches wherever necessary.
4) Use of non-programmable pocket calculator is permissible.
5) Mathematical and other tables shall be made available on request.
6) Assume additional suitable data necessary.
7) Use of Mobile is strictly prohibited.

Q.1 Attempt any **FOUR** **Marks (08)**

a) Define stress and state its types.

b) State stoke's law of viscosity. Write formula for the same.

c) Define i) Density ii) compressibility

d) What is effect of temperature and impurity on surface tension of liquid?

e) Write any two characteristics of linear SHM.

f) Define i) nanometer ii) nanoparticle.

Q.2 Attempt any **FOUR** **(16)**

a) Explain stress-strain curve for a wire under continuously increasing load.

b) Define viscosity and velocity gradient. State Newton's law of viscosity.

c) Derive an expression for surface tension by capillary rise method.

d) Write any four applications of surface tension.

e) Distinguish between free oscillations and forced oscillations (any four points)

f) Define nanostructured material and write its three examples.

Q.3 Attempt any **FOUR** **(16)**

a) Write any four applications of viscosity.

b) State significance of angle of contact.(any four points)

c) Distinguish between transverse wave and longitudinal wave (any four points)

d) Define the following terms.

i) Periodic motion

ii) Forced oscillations

iii) Wave

iv) Resonance

e) State any four applications of nanotechnology in space.

f) A wire of length 2m extends by 3mm when a force of 1.8N is applied to it calculate

i) Stress produced in it if $Y=2x10^{11}N/m^2$

ii) Area of wire

Q.4 Attempt any **FOUR** **(08)**

a) Define echo & reverberation

b) Define ultrasonic wave.

c) State any two properties of X-rays.

d) State Ohm's law.

e) State Snell's law of refraction.

f) What is meant by LASER?

Q.5 Attempt any **FOUR** **(16)**

a) State any four requirements of good acoustics of building.

b) Explain the production of X-rays using collidge tube.

c) Derive Einstein photoelectric equation.

d) Derive expression for equivalent resistance when number of resistance are connected in series.

e) State four properties of LASER.

f) Explain with neat ray diagram, refraction through glass prism.

Q.6 Attempt any **FOUR** **(16)**

a) Three resistances are 1, 2 & 3 Ohms. Find the ratio of their effective resistance when connected in series to that connected in parallel.

b) State any four characteristics of photoelectric effect.

c) Derive prism formula.

d) What is Planck's hypothesis? Define threshold frequency of radiation.

e) State applications of LASER (any four)

f) Explain the production of ultrasonic wave using magnetostriction method.

****

GOVERNMENT POLYTECHNIC, KOLHAPUR – 416004.

(An Autonomous Institute of Govt. Of Maharashtra)

EVEN TERM END EXAM April/ May 2017

EXAM SEAT NO. | | | | | | |

LEVEL : - **THIRD** PROGRAM : **MECHANICAL ENGINEERING**

COURSE CODE :- **MEE304/ME204/M204**

COURSE NAME :- **MANUFACTURING PROCESSES**

MAX. MARKS : **80** TIME : **3 HRS.** DATE: - **27 / 04 / 2017**

Instruction:-

1) Answers must be written in the main answer book provided.(and supplements if required)
2) Figure to the right indicate marks.
3) Illustrate your answers with sketches wherever necessary.
4) Use of non-programmable pocket calculator is permissible.
5) Mathematical and other tables shall be made available on request.
6) Assume additional suitable data necessary.
7) Use of Mobile is strictly prohibited.

Marks

Q.1 Attempt any **FOUR** (08)

a) Define the term 'Pattern'.

b) Sketch a horizontal core.

c) State the ingredients of a moulding sand.

d) What is Mis Run?

e) State the applications of forging.

f) What is edging?

Q.2 Attempt any **FOUR** (16)

a) State the need of providing colour codes on a pattern.

b) List different types of pattern. Describe the pattern suitable for symmetrical pattern effectively.

c) Describe machine moulding process with suitable example.

d) Describe the properties which a core sand should possess?

e) State the principle of an oil fired furnace. Sketch it.

f) State the causes and remedies of i) Blow holes ii) Scab.

Q.3 Attempt any **FOUR** (16)

a) Define various types of sand.

b) Describe green sand moulding with suitable example.

c) Sketch a cold chamber die-casting. State its two advantages.

d) Describe various zones in cupola furnace.

e) Sketch an open die. State its use.

f) Define 'forgeability'. Write about forgeable materials.

Q.4 Attempt any **FOUR** (08)

a) List the major components in die set.

b) Classify press machines.

c) Define welding.

d) State the applications of Extrusion.

e) State the types of plastics.

f) State the manufacturing method for i) Plastic bottle cap ii) Plastic bucket.

Q.5 Attempt any **FOUR** (16)

a) Explain Injection moulding with neat sketch.

b) Explain principle of rolling with neat sketch.

c) Distinguish between Hot rolling and Cold rolling.

d) Explain submerged arc welding with neat sketch.

e) List gas welding techniques.

f) List press working operations. Explain any one with sketch.

Q.6 Attempt any **FOUR** (16)

a) Explain compound die with neat sketch.

b) State and explain welding defects.

c) Explain working principle of soldering and state its applications.

d) Explain four High Rolling Mill with neat sketch.

e) Explain indirect extrusion with neat sketch.

f) What is thermoplastic material? And state the properties of plastics.

****

GOVERNMENT POLYTECHNIC, KOLHAPUR 416004.

(An Autonomous Institute of Govt. of Maharashtra)

EVEN TERM END EXAM APRIL/MAY -2017

EXAM SEAT NO. | | | | | | |

LEVEL: **THIRD** PROGRAM: **COMMON**

COURSE CODE: **EEE305/IEE301/ETE301/ITE301/EE201/IX201/EJ201/IT201/IE201/IF201/201**

COURSE NAME: **APPLIED MATHEMATICS**

MAX. MARKS: **80** TIME: **3 HRS.** DATE: **08/05/2017**

Instruction:-

1) Answers must be written in the main answer book provided. (and supplements if required)
2) Figure to the right indicates marks.
3) Illustrate your answers with sketches wherever necessary.
4) Use of non-programmable pocket calculator is permissible.
5) Mathematical and other tables shall be made available on request.
6) Assume additional suitable data necessary.
7) Use of Mobile is strictly prohibited.

Q.1 Attempt any **FOUR** **Marks (08)**

a) Evaluate $\int \left[e^{2\log x} + e^{x\log a}\right]dx$

b) Find $\int \frac{\sin\sqrt{x}}{\sqrt{x}}dx$

c) Evaluate $\int \frac{dx}{3+2x-x^2}$

d) Evaluate $\int_1^2 \frac{dx}{3x-2}$

e) Evaluate $\int_1^e \log x dx$

f) Find mean value of y=cosx over the range from $x = \frac{-\pi}{2}$ to $x = \frac{\pi}{2}$

Q.2 Attempt any **FOUR** **(16)**

a) Evaluate $\int \frac{dx}{(x^2+4)(x+1)}$

b) Evaluate $\int \frac{dx}{3\sin 2x + 2\cos 2x}$

c) Evaluate $\int \frac{x+2}{\sqrt{x^2+5x+6}}dx$

d) Evaluate $\int_0^{\pi/4} \log(1+\tan x)dx$

e) Evaluate $\int_1^3 \frac{\sqrt[3]{x+5}}{\sqrt[3]{x+5}+\sqrt[3]{9-x}}dx$

f) Using integration find the area of the circle $x^2+y^2=16$

Q.3 Attempt any **FOUR** **(16)**

a) Evaluate $\int_{\pi/6}^{\pi/3} \frac{1}{1+\sqrt[n]{\cot x}}dx$

b) Evaluate $\int \frac{3\sin x + 4\cos x}{2\sin x - \cos x}dx$

P.T.O

c) Evaluate $\int \cos\sqrt[3]{x}\, dx$

d) Evaluate $\int \frac{dx}{4\cos^2 x + 9\sin^2 x}$

e) Find R.M.S value of the I=10sin100πt over a complete period.

f) Find the area enclosed by the parabola $y = x^2 - 5x + 15$ and the line $y - 3x = 3$.

Q.4 Attempt any **FOUR** **(08)**

a) From the differential equation whose solution is y=acos3t+bsin3t

b) State order and degree of $y = \frac{dy}{dx} + \frac{c}{dy/dx}$

c) Show that $y^3 \sec^2 x\, dx + (3y^2.\tan x - \sec^2 y)dy = 0$ is exact.

d) Find x and y satisfying the equation $(2+i)x + (i-3)y = 4$

e) Find the value of $i^{49} + i^{68} + i^{89} + i^{110}$

f) Find the complex conjugate of $\frac{3+5i}{1+2i}$

Q.5 Attempt any **FOUR** **(16)**

a) Solve: $\frac{dy}{dx} - \frac{2}{x}y = x^2 e^x$, if y=0 when x=1

b) Solve: $(e^x + 2x^2 y + y^3)dx + (a^y + 2x^2 y + 3xy^2)dy = 0$

c) Solve : $x^2 y dx = (x^3 + y^3)dy$

d) Express $1+i$ *in* $(x+iy)$ form.

e) Simplify using De Moivre's Theorem $\frac{(\cos 2\theta + i\sin 2\theta)^3 (\cos 3\theta - i\sin 3\theta)^4}{(\cos\theta + i\sin\theta)^2 (\cos 2\theta - i\sin 2\theta)^{-3}}$

f) If $\cos(x+iy) = \alpha + i\beta$ show that *i)* $\frac{\alpha^2}{\cos^2 x} - \frac{\beta^2}{\sin^2 x} = 1$ *ii)* $\frac{\alpha^2}{\cosh^2 y} + \frac{\beta}{\sinh^2 y} = 1$

Q.6 Attempt any **FOUR** **(16)**

a) Solve $\frac{dy}{dx} = \sin(x+y)$

b) Solve $\frac{dy}{dx} = \frac{xy}{(1-x)(1+y)}$

c) If the slope of the curve is $x^2 + 2x + 1$, find its equation if it passes through the point (1, 1)

d) Find 2 values of $(1-i)^{1/2}$

e) Using Euler's formula, prove the following

i) $\sin 2\theta = 2\sin\theta\cos\theta$

ii) $\cosh^2 x + \sinh^2 x = \cosh 2x$

f) Show that $\sqrt{3+i}$ is a cube root of $8i$

****

GOVERNMENT POLYTECHNIC, KOLHAPUR – 416004.

(An Autonomous Institute of Govt. Of Maharashtra)

EVEN TERM END EXAM April/ May 2017

EXAM SEAT NO. | | | | | | |

LEVEL : - **FIRST** PROGRAM : **MECHANICAL/SUGAR**

COURSE CODE :- ***CCF108/CCE108/X107/R110**

COURSE NAME :- **ENGINEERING DRAWING-II**

MAX. MARKS : **80** TIME : **4 HRS.** DATE: - **08 / 05 / 2017**

Instruction:-

1) Answers must be written in the main answer book provided.(and supplements if required)
2) Figure to the right indicate marks.
3) Illustrate your answers with sketches wherever necessary.
4) Use of non-programmable pocket calculator is permissible.
5) Mathematical and other tables shall be made available on request.
6) Assume additional suitable data necessary.
7) Use of Mobile is strictly prohibited.

Marks

Q.1 Attempt any **TWO** (08)

a) Draw proportionate free hand sketch for eye foundation bolt.

b) Draw free hand sketch for square thread.

c) Sketch two views of double riveted lap joint with Zig-Zag riveting.

Q.2 Attempt any **ONE** (16)

a) Refer Fig. 1 and draw i) F.V. ii) T.V. & iii) Side view from left.
Use first angle method.

b) Fig. 2. Show pictorial view of an object. Draw three views of object.
Use first angle method.

Q.3 Attempt any **ONE** (16)

a) Pictorial view of an object is shown in Fig.5 Using first angle method draw.

i) Sectional F.V.

ii) T.V.

iii) Left hand side view.

b) Using first angle method, draw

i) Sectional F.V.

ii) T.V.

iii) Left hand side view.

Refer Fig. 6

P.T.O.

Q.4 Attempt any **ONE** (08)

a) Fig. (I) Shows front view and top view of an object. Draw following views.

i) Sectional Front view (section along A-A) (03)
ii) Top view. (02)
iii) Missing Left hand side view. (03)

b) Fig. (II) Shows the top view and front view of a bracket. Draw the following view.

i) Front view. (02)
ii) Top view. (02)
iii) Missing sectional Left hand side view. (04)

Q.5 Attempt any **ONE** (16)

a) Fig. (III) Shows Elevation and plan of an object. Draw isometric view. Take '0' as origin. Use Natural scale.

b) Fig. (IV) Show Elevation and plan of an object. Draw isometric projection construct an Isometric scale. Take '0' as origin.

Q.6 Attempt any **TWO** (16)

a) A pentagonal prism side of base 50mm &axis length 100mm is kept on H.P. on its base with a side of base perpendicular to V.P. A square hole of side 55mm is drilled with its axis perpendicular to V.P., parallel to H.P. and bisecting the axis of the pentagonal prism. Draw the development of lateral surface. Assume the faces of the hole equally inclined to H.P.

b) A square pyramid 50mm edge of base and axis 60mm is resting on its base in H.P. with edges of base equally inclined to V.P. A square hole with side 25mm is cut through the square pyramid such that its axis intersects the axis of pyramid, 22mm above the base. The axis of hole is perpendicular to V.P. all the faces of square hole are equally inclined with H.P. Draw the development of lateral surface of pyramid.

c) Draw the development of lateral surface of the cylinder having a square hole cut in it as shown in Fig. (V)

P.T.O

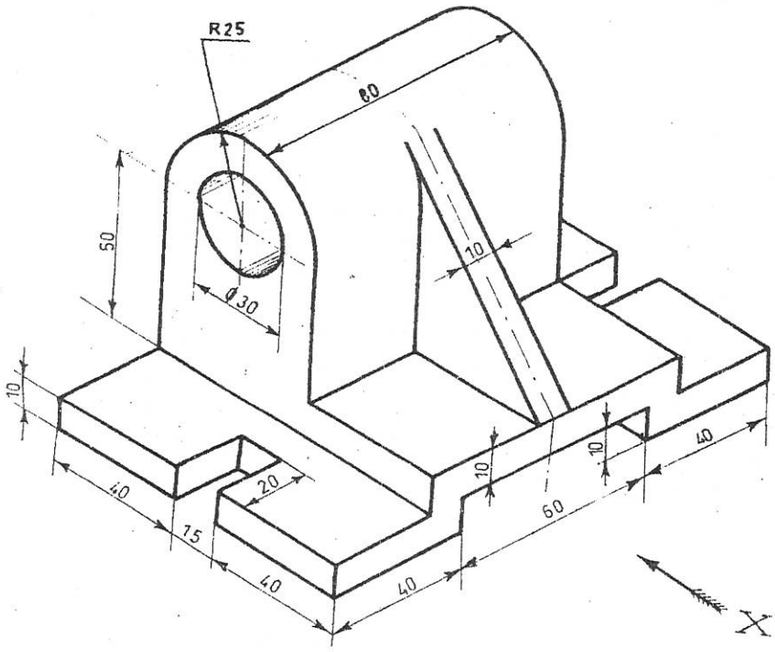

Q. No. 2 (a)

Fig. 1

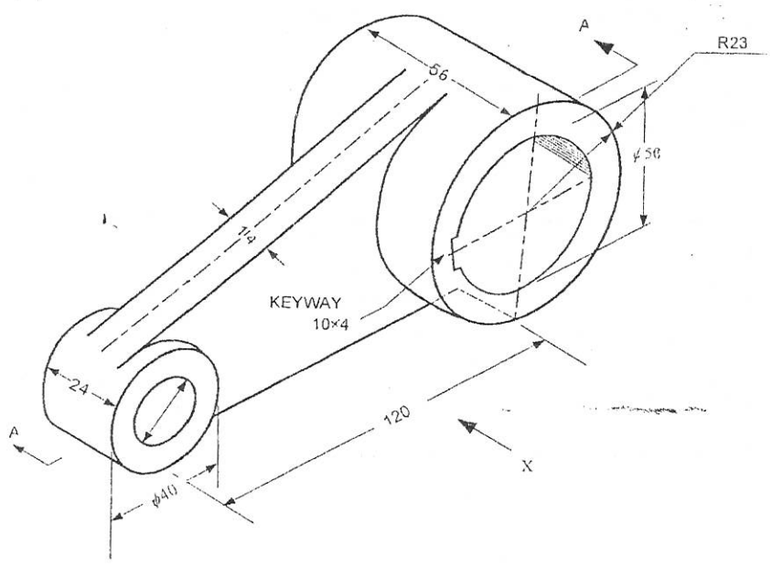

Q. No. 2 (b)

Fig. 2

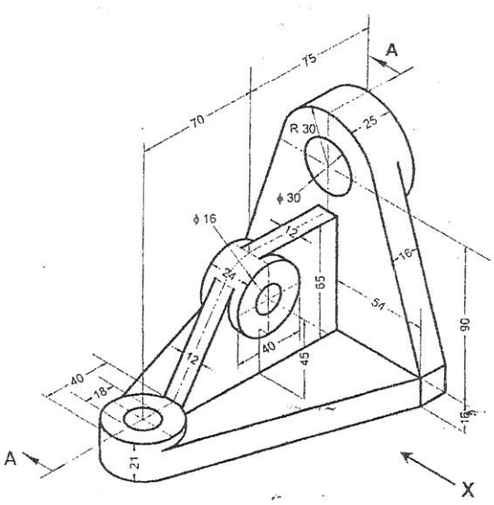

Fig. 5

Q. No. 3 (a)

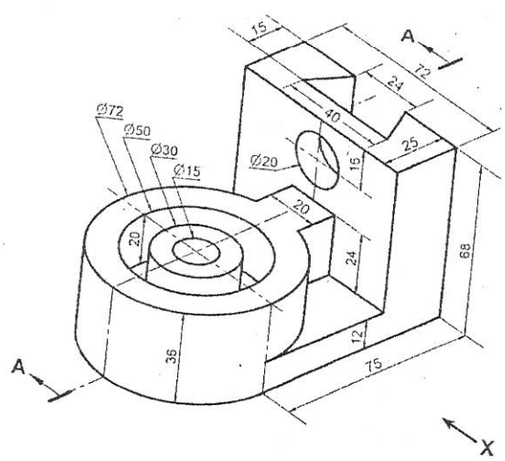

Fig. 6

Q. No. 3 (b)

P.T.O.

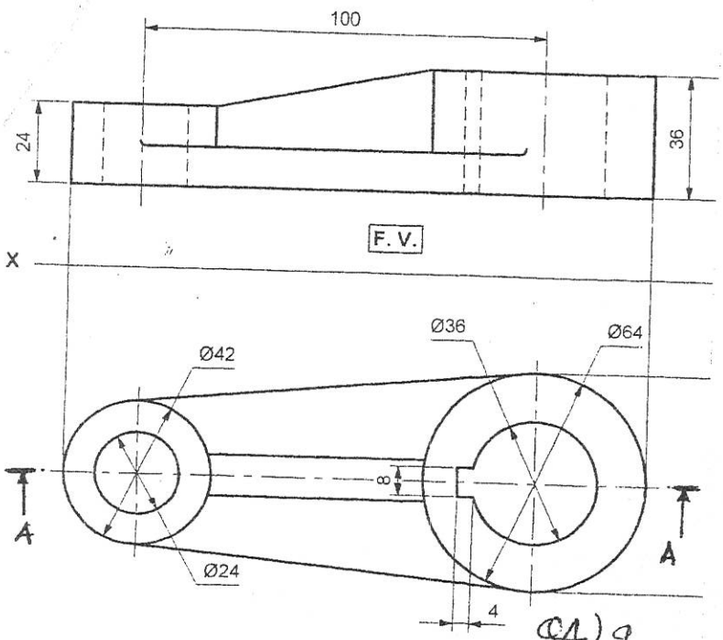

Q4) a
Fig(I)

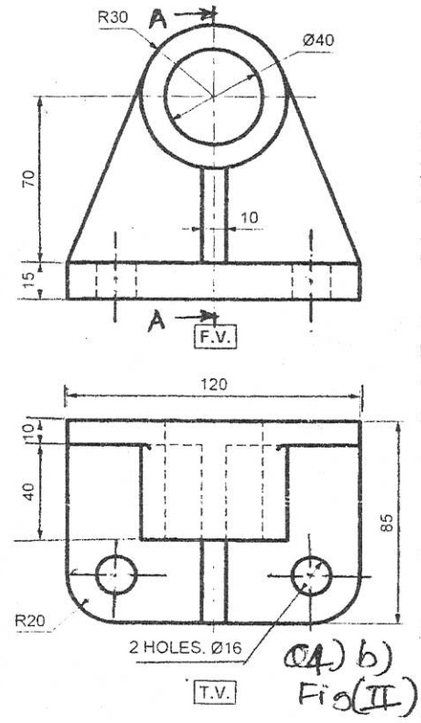

Q4) b)
Fig(II)

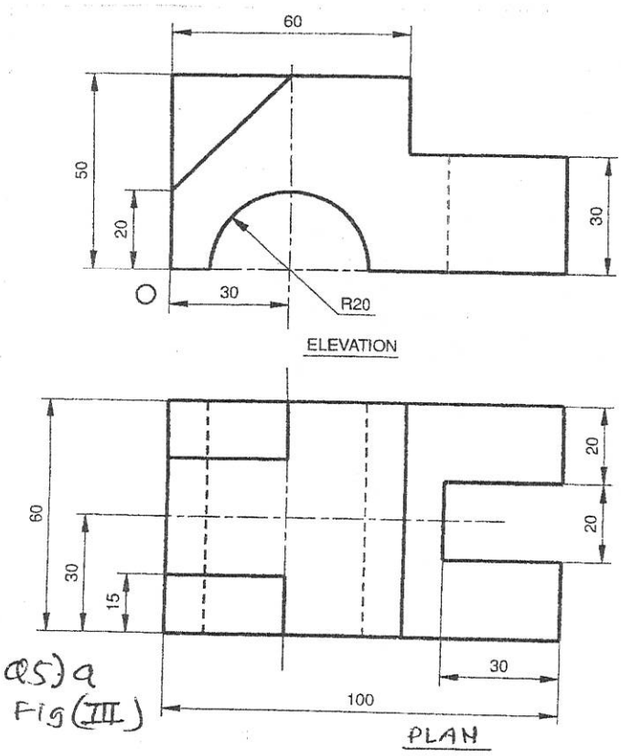

Q5) a
Fig(III)

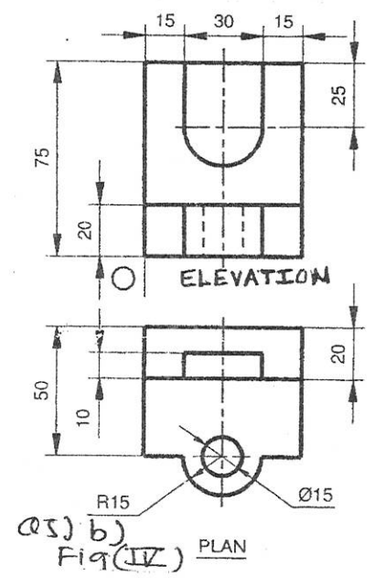

Q5) b)
Fig(IV)

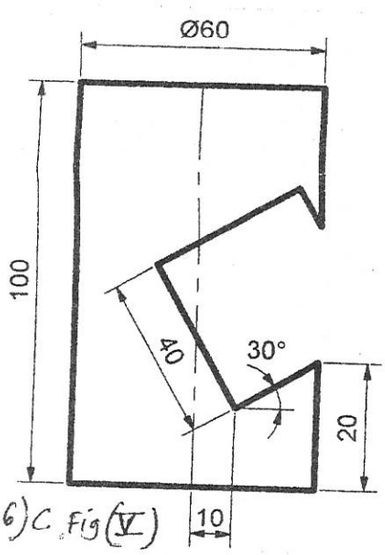

Q6) C. Fig(V)

* * * * *

GOVERNMENT POLYTECHNIC, KOLHAPUR 416004.

(An Autonomous Institute of Govt. of Maharashtra)

EVEN TERM END EXAM APRIL/MAY -2017

EXAM SEAT NO. | | | | | | |

LEVEL: **THIRD** PROGRAM: **COMMON**

COURSE CODE:

CEE301/MEE301/SME301/MTE301/CE201/ME201/SM201/MT201/C201/M201/1201/2201

COURSE NAME: **APPLIED MATHEMATICS**

MAX. MARKS: **80** TIME: **3 HRS.** DATE: **08/05/2017**

Instruction:-

1) Answers must be written in the main answer book provided. (and supplements if required)
2) Figure to the right indicates marks.
3) Illustrate your answers with sketches wherever necessary.
4) Use of non-programmable pocket calculator is permissible.
5) Mathematical and other tables shall be made available on request.
6) Assume additional suitable data necessary.
7) Use of Mobile is strictly prohibited.

Q.1 Attempt any **FOUR** **Marks (08)**

a) Evaluate $\int \left[e^{2\log x} + e^{x\log a}\right]dx$

b) Find $\int \frac{\sin\sqrt{x}}{\sqrt{x}}dx$

c) Evaluate $\int \frac{dx}{3+2x-x^2}$

d) Evaluate $\int_1^2 \frac{dx}{3x-2}$

e) Evaluate $\int_1^e \log x dx$

f) Find mean value of y=cosx over the range from $x = \frac{-\pi}{2}$ to $x = \frac{\pi}{2}$

Q.2 Attempt any **FOUR** **(16)**

a) Evaluate $\int \frac{dx}{(x^2+4)(x+1)}$

b) Evaluate $\int \frac{dx}{3\sin 2x + 2\cos 2x}$

c) Evaluate $\int \frac{x+2}{\sqrt{x^2+5x+6}}dx$

d) Evaluate $\int_0^{\pi/4} \log(1+\tan x)dx$

e) Evaluate $\int_1^3 \frac{\sqrt[3]{x+5}}{\sqrt[3]{x+5}+\sqrt[3]{9-x}}dx$

f) Using integration find the area of the circle $x^2 + y^2 = 16$

Q.3 Attempt any **FOUR** **(16)**

a) Evaluate $\int_{\pi/6}^{\pi/3} \frac{1}{1+\sqrt[n]{\cot x}}dx$

b) Evaluate $\int \frac{3\sin x + 4\cos x}{2\sin x - \cos x}dx$

c) Evaluate $\int \cos\sqrt[3]{x}\, dx$

d) Evaluate $\int \frac{dx}{4\cos^2 x + 9\sin^2 x}$

e) Find R.M.S value of the I=10sin100πt over a complete period.

f) Find the area enclosed by the parabola $y = x^2 - 5x + 15$ and the line $y - 3x = 3$.

P.T.O

Q.4 Attempt any **FOUR** **(08)**

a) Form the differential equation by eliminating arbitrary constants if $y = A\cos 3x + B\sin 3x$

b) Solve $\sqrt{1-y^2}\,dx = \sqrt{1-x^2}\,dy$

c) state order and degree of the differential equation $\sqrt{1+\frac{dy}{dx}} = \frac{d^2y}{dx^2}$

d) Find range of the following data: 49, 13, 11, 12, 42, 29, 18, 27.

e) Find the probability of getting a sum of 3 when 2 unbiased dice is thrown.

f) The velocity of a body is given by $v = t(3+5t)$. How much distance does it travel in 4sec if it was initially at rest?

Q.5 Attempt any **FOUR** **(16)**

a) Solve: $\cos^2 x\frac{dy}{dx} + y = \tan x$

b) Solve: $v\frac{dv}{dx} = g - kv^2$ Where g and k are constants.

c) Solve: $(x+y+1)^2\frac{dy}{dx} = 1$

d) Calculate mean deviation about mean of the following data

Marks	3	4	5	6	7	8
No. of student	1	3	7	5	2	2

e) Calculate variance

C.I	0-10	10-20	20-30	30-40	40-50	50-60
fi	14	23	27	21	15	19

f) A husband and wife appeared for an interview for two vacancies in an office. The probability of husbands' selection is $\frac{2}{7}$ and that of wife selection is $\frac{1}{4}$.

Find the probability that

i) Both of them are selected.

ii) Only one of them is selected.

Q.6 Attempt any **FOUR** **(16)**

a) If A and B are two events such that P(A)=0.8, P(B)=0.6, P(A∩ B)=0.5, find i) P(AUB) ii) p($\frac{A}{B}$) iii) p($\frac{B}{A}$)

b) Solve: $(2xy + y - \tan y)dx + (x^2 - x\tan^2 y + \sec^2 y)dy = 0$

c) Solve: $y\,dx = xdy + \sqrt{xy}\,dx$

d) Find the equation of curve whose slope at any point is equal to $\frac{2y+x+1}{x}$ and which passes through the point (1, 0).

e) The mean weight of 150 students is 60kg. The mean weight of boys is 70kg with a S.D of 10kg. For the girls, the mean weight is 55kg. and the S.D is 15kg. Find the number of boys and the combined S.D.

f) The following table shows the marks obtained by 100 students in an examination. Calculate mean and variance.

Marks	1-10	11-20	21-30	31-40	41-50	51-60
No.of candidates	3	16	26	31	16	08

****

GOVERNMENT POLYTECHNIC, KOLHAPUR 416004.

(An Autonomous Institute of Govt. of Maharashtra)

EVEN TERM END EXAM APRIL/MAY-2017

EXAM SEAT NO. | | | | | | |

LEVEL: **THIRD.** PROGRAM: **CE/ME/SM/MT.**

COURSE CODE: **CEE313/MEE313/MTE312/SME312/ME214/MG228/R228.**

COURSE NAME: **HIGHER MATHS.**

MAX. MARKS: **80** TIME: **3 HRS.** DATE: **05/05/2017**

Instruction:-

1) Answers must be written in the main answer book provided. (and supplements if required)
2) Figure to the right indicates marks.
3) Illustrate your answers with sketches wherever necessary.
4) Use of non-programmable pocket calculator is permissible.
5) Mathematical and other tables shall be made available on request.
6) Assume additional suitable data if necessary.
7) Use of Mobile is strictly prohibited.

Q.1 Attempt any **FOUR** **Marks (08)**

a) Prove that $\Delta\nabla = E + E^{-1} - 2$

b) Show that $(\frac{\Delta^2}{E})x^3 = 6x, if\ h = 1.$

c) Write Lagrange's interpolation formula for $x = x_3$

d) If $u = f\left(\frac{x}{y}\right) + \sqrt{x^2 + y^2},\ find\ \frac{\partial u}{\partial x}$

e) If u=f(v) where v is a homogeneous function of x, y of degree n, prove that $x\frac{\partial u}{\partial x} + y\frac{\partial u}{\partial y} = nv\, f^1(v).$

f) If x=ucosv, y=usinv find Jacobian, $J\left(\frac{x,y}{u,v}\right)$

Q.2 Attempt any **FOUR** **(16)**

a) Using Lagrange's interpolation formula, find the polynomial which takes the values as

x	0	1	2
y	1	4	6

b) Given :

x	10	15	20
f(x)	14	18	28

Estimate f(12) using Newton's forward interpolation formula.

c) Given :

x	0^0	30^0	60^0	90^0
$Cosx^0$	1	0.87	0.5	0

Find $\cos 75^0$ using Newton's backward difference interpolation formula.

d) If u= f(r) & $r^2 = x^2+y^2+z^2$, prove that, $\frac{\partial^2 y}{\partial x^2} + \frac{\partial^2 y}{\partial y^2} + \frac{\partial^2 y}{\partial z^2} = f''(r) + \frac{2}{r}f'(r)$

e) If u=sin $(\frac{xy+yz+zx}{x^2+y^2+z^2})$ prove that, $x\frac{\partial u}{\partial x} + y\frac{\partial u}{\partial y} + z\frac{\partial u}{\partial z} = 0$

f) If $u=x+2y^2-z^3$, $v=x^2yz$, $w=2z^2-xy$, find $\frac{\partial(u,v,w)}{\partial(x,y,z)}$.

Q.3 Attempt any **FOUR** **(16)**

a) Given f(0)=3,f(1)=6,f(2)=11,f(3)=18, estimate f(1.5) using Lagrange's interpolation formula.

P.T.O

b) Find f(4.5) from the following data.

x	1	2	3	4	5
f(x)	2.38	3.65	5.85	9.95	14.85

c) Using Newton's forward difference interpolation formula find f(8) from the data

x	5	10	15	20
f(x)	50	70	100	145

d) If x= rcosθ, y= rsinθ, prove that $JJ^{1}=1$

e) If $z=x^2+\tan^{-1}(\frac{y}{x}) - y^2 tan^{-1}(\frac{x}{y})$, prove that, $\frac{\partial^2 z}{\partial x \partial y} = \frac{x^2-y^2}{x^2+y^2}$

f) Verify Euler's formula for the function $Z=\sin^{-1}[\frac{x^2+y^2}{x+y}]$

Q.4 Attempt any **FOUR** **(08)**

a) Find L(cos5t cost)

b) Find L $\left(\frac{(3t^2+t)^3}{t^2}\right)$

c) Find L $(2te^{2t})$

d) Find L^{-1} $(\frac{3+2s+s^2}{s^3})$

e) Find L^{-1} $(\frac{3s-12}{s^2+8})$

f) Solve $\frac{d^2x}{dt^2} + \frac{2dx}{dt}+1= 0.$

Q.5 Attempt any **FOUR** **(16)**

a) Evaluate $\int_0^\infty e^{-3t} t\cos 2t \, dt$ by $L.T.$method.

b) Find $L^{-1}\left(\frac{4s+5}{(s-1)^2(s+2)}\right)$.

c) Find $L^{-1}\left(\frac{1}{s(s^2+4)}\right)$ by Convolution theorem.

d) Solve $\frac{dy}{dt} + y = e^{-3t}\, y(0) = 1.$

e) Solve $\frac{d^4y}{dx^4} + 4y = 0.$

f) Solve $(D^3 - 4D^2 + 13D)y = 0$

Q.6 Attempt any **FOUR** **(16)**

a) Find L $(te^{-t}\sin 3t)$

b) Find L^{-1} $\left(\frac{1}{(s^2+4)^2}\right)$ by Convolution theorem

c) Find $L^{-1}\left(\frac{s+3}{(s^2+4s+13)}\right)$ by Convolution theorem

d) Solve $\frac{dx}{dt} = 1 + e^t, x(0) = -1.$

e) Solve $\frac{d^3y}{dx^3} - \frac{d^2y}{dx^2} + 3\frac{dy}{dx} + 5y = 0.$

f) Solve $(D^4+2D^2+1)\, y=0.$

****

GOVERNMENT POLYTECHNIC, KOLHAPUR – 416004.

(An Autonomous Institute of Govt. Of Maharashtra)

EVEN TERM END EXAM April/ May 2017

EXAM SEAT NO. | | | | | | |

LEVEL : - **THIRD** PROGRAM : **CE/ME/IE/SM/MT/E & TC**

COURSE CODE :- **MEE312/MTE311/IEE311/ETE311/MG227/R227**

COURSE NAME :- **NON CONVENTIONAL ENERGY SOURCES**

MAX. MARKS : **80** TIME : **3 HRS.** DATE: - **05 / 05 / 2017**

Instruction:-

1) Answers must be written in the main answer book provided.(and supplements if required)
2) Figure to the right indicate marks.
3) Illustrate your answers with sketches wherever necessary.
4) Use of non-programmable pocket calculator is permissible.
5) Mathematical and other tables shall be made available on request.
6) Assume additional suitable data necessary.
7) Use of Mobile is strictly prohibited.

Marks

Q.1 Attempt any **FOUR** (08)

a) Enlist any four renewable energy sources.

b) How energy sources are classified?

c) Define: Power Coefficient.

d) State the basic principle of wind energy conversion.

e) State the categories in which biomass resources fall.

f) State different biomass conversion technologies.

Q.2 Attempt any **FOUR** (16)

a) Why alternative energy sources are necessary?

b) Define : i) Hour angle ii) Declination iii) Azimuth angle iv) Zenith angle.

c) Describe the prospects of alternative energy sources.

d) Draw a block diagram showing basic components of wind energy conversion system.

e) Differentiate between biomass and conventional fuel.

f) How Wind Mills are classified?

Q.3 Attempt any **TWO** (16)

a) Explain with neat sketch, Deenbandhu biogas plant.

b) What factors are considered for selection of site of Wind Mill?

c) Explain with neat sketch solar pond.

P.T.O.

Q.4 Attempt any **FOUR** (08)

a) How should be the site, favorable for a tidal power plant?

b) What are the difficulties in tidal power plant?

c) State two advantages and disadvantages of geothermal energy over other energy forms.

d) State the principles of Energy conservation.

e) State the meaning of the term ' Simple Pay back Period'.

f) What is fuel cell? State the main components.

Q.5 Attempt any **FOUR** (16)

a) Explain single basin and double basin arrangement of tidal power plant.

b) Describe the working and main types and OTEC power plants.

c) Write four advantages and four limitations of small scale hydroelectric power generation.

d) Explain Geothermal energy power plant.

e) Draw a simple MHD generator and explain principle of MHD power generation.

f) Write various components of SHP and state their functions.

Q.6 Attempt any **FOUR** (16)

a) Write classification of small hydro power station. State type of turbine suitable for micro hydel plant and explain.

b) Explain the concept of waste heat utilization.

c) State the types of energy audit and explain in short.

d) Explain the meaning of Co-generation and its benefits in industries.

e) Discuss the energy conservation technologies.

f) Draw and explain Sankey diagram for energy audit of a factory.

****